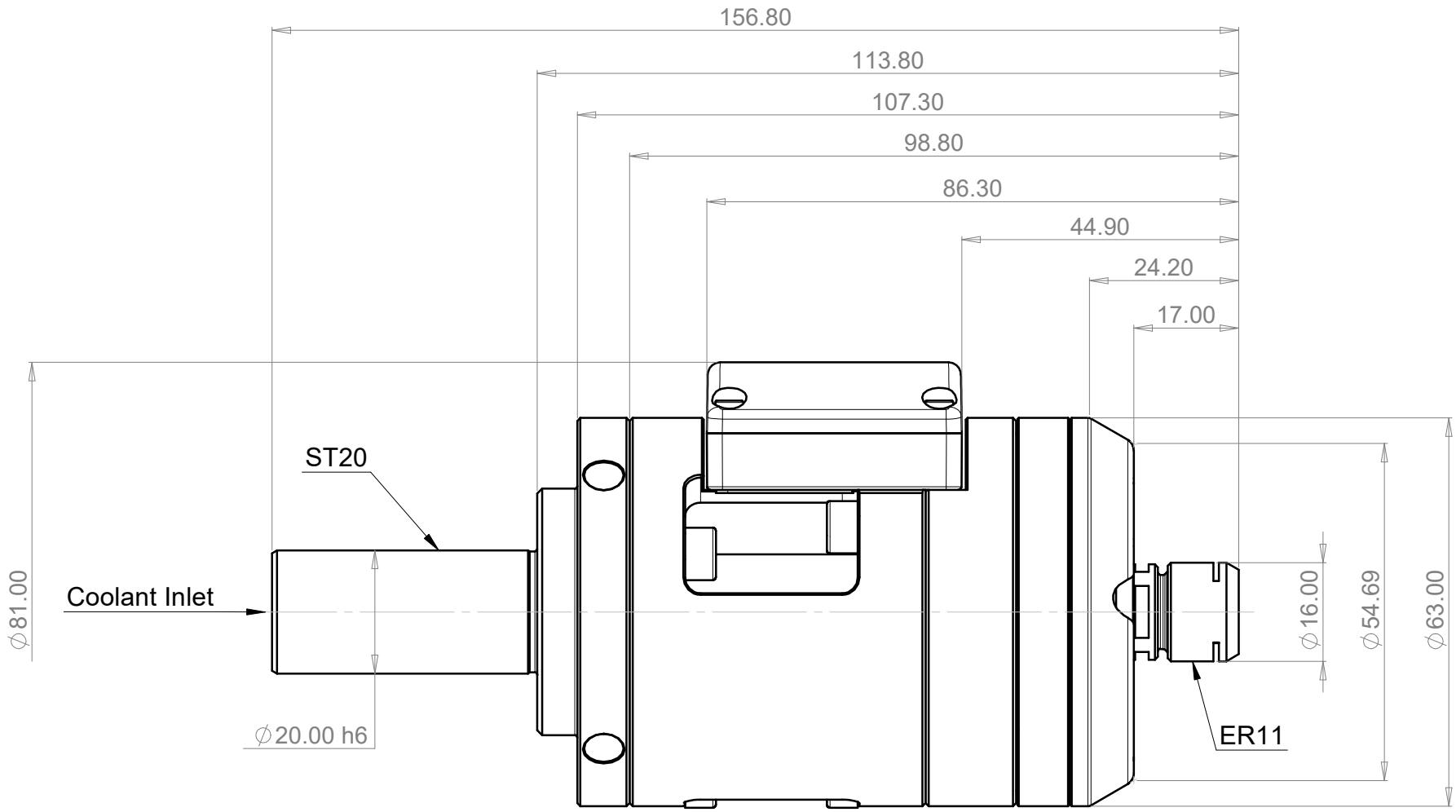
156.80
113.80
107.30
98.80
86.30
44.90
24.20
17.00
ST20
Coolant Inlet
∅81.00
∅20.00 h6
∅16.00
∅54.69
∅63.00
ER11