COLIBRI SPINDLES

HIGH-SPEED MACHINING

FAMILY OF HSM JET SPINDLE

Ultra precision high-speed Jet Spindles for a variety of milling and drilling processes with small tools. Cuts machining time up to 70%.

COOLANT DRIVEN HIGH-SPEED SPINDLES

RPM display monitoring (receiver)

FEATURES

The revolutionary modular high-speed Jet Spindle, meticulously designed, engineered, manufactured and assembled with ultra precision industry collets and nuts, offers maximum flexibility for a wide range of small tool applications.

BENEFITS

- √ Quick and easy installation
- √ Free energy source
- √ Good chip evacuation
- √ Coolant at the cutting edge
- √ Used in tool changer
- √ Compact design

Recommended Working Zone for TJS HPC vs GJET

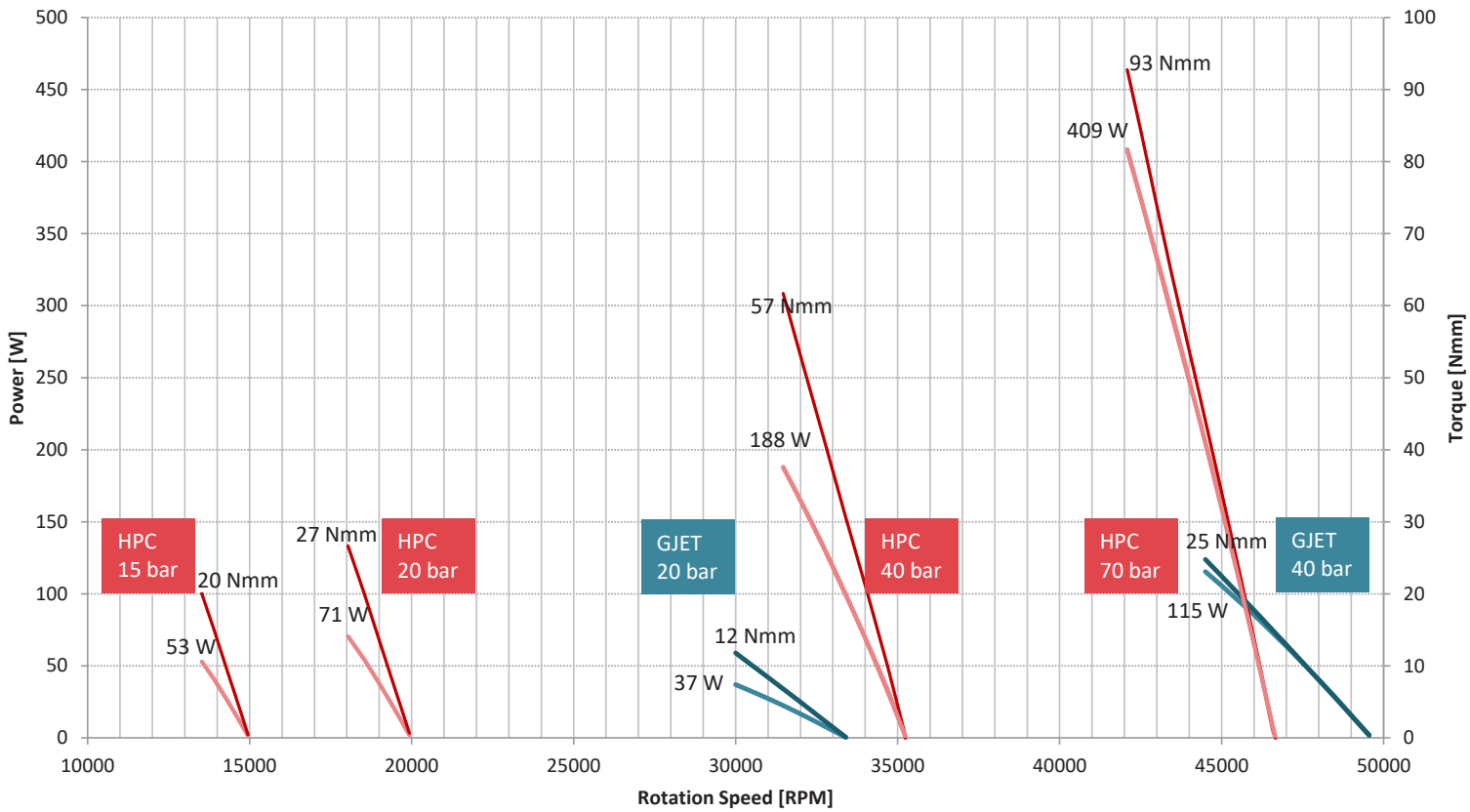

HPC JET - ideal for all small tools, both versatile and powerful and as accurate as the GJET.

GJET - ideal for applications requiring micro tools and very high speeds at 20 to 40 bar.

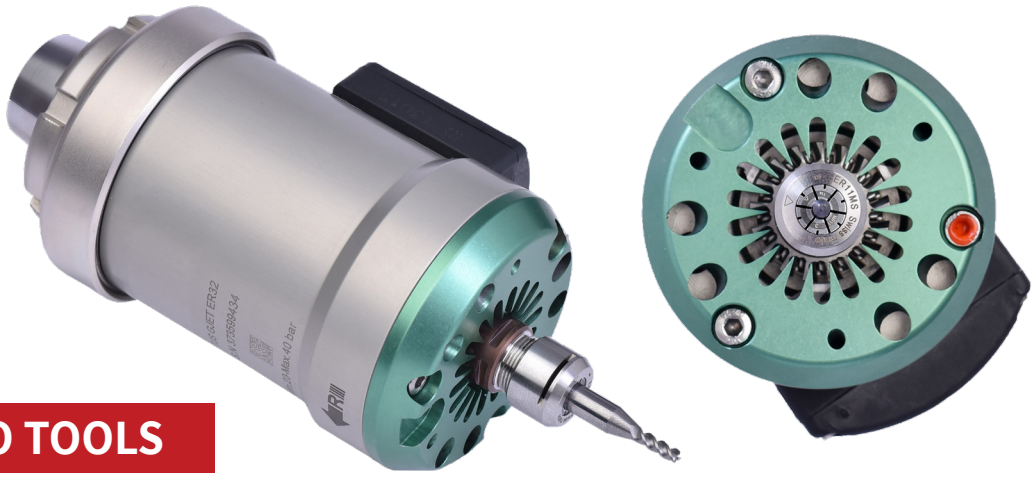

SPEED FOR MICRO TOOLS

JET SPINDLE OPERATING PARAMETERS						GJET
High Pressure Coolant (BAR)		20	40	Terms of Use		
Min Coolant Inlet Diameter		6 mm		**Collet**	ER11	AA/UP
Min Flow Rate (L/min)		10	20	**Runout**	3 micron	At length of 3D
Idle Speed (RPM)		33,000	55,000			
Max Power (W) / **Torque** (Nmm)		37 / 12	115 / 25	SMALL TOOL EXPERTISE REQUIRED		
Application	**Cutting tool [mm]**		**P**	**M**	**N**	**S**
Drilling			0.1 - 1.0		0.1 - 2.0	
Milling	Single / 2 / 4 Flute Helical, Corner Radii		0.1 - 2.0		0.1 - 3.0	
Profiling	Ball-Nose [1]		0.1 - 2.0		0.1 - 3.0	
Chamfering			0.1 - 2.0		0.1 - 3.0	
Lollipop	Lollipop [1]		0.2 - 2.0		0.2 - 3.0	
Profiling	Barrel		0.5 - 2.0		0.5 - 3.0	
Engraving			0.2 - 2.0		0.2 - 3.0	
FILES AVAILABLE FOR DOWNLOAD IN ONLINE CATALOGUE: https://colibrispindles.com/catalog/						
ADAPTER	**C5/6**	**CAT40**	**SK30/40**	**ER32/ST20**	**HSK-A40/A63**	**BT30/40**

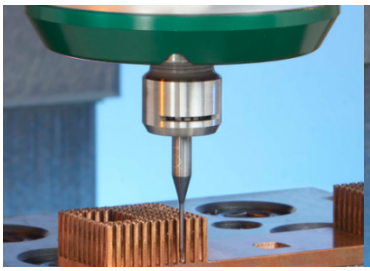

Milling

Drilling

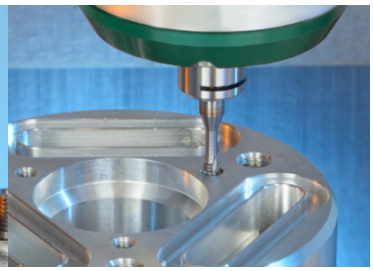

Thread Milling

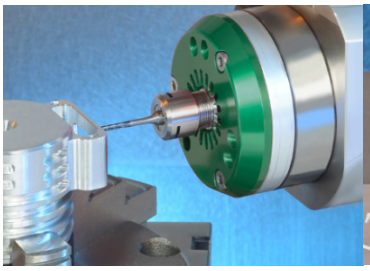

Chamfering

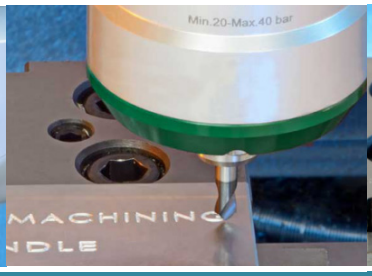

Engraving

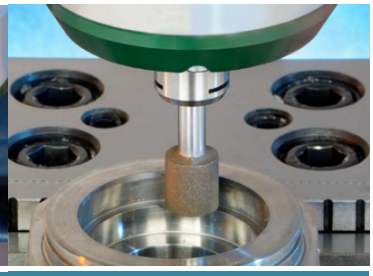

Grinding

POWER & EFFICIENCY

JET SPINDLE OPERATING PARAMETERS						HPC JET
High Pressure Coolant (BAR)	15	20	40	70	Terms of Use	
Min Coolant Inlet Diameter	6 mm				**Collet**	ER11 AA/UP
Min Flow Rate (L/min)	10	12	16	22	**Runout**	3 micron
Idle Speed (RPM)	20,000	25,000	35,000	45,000		
Max Power (W) **/ Torque** (Nmm)	196 / 100	261 / 134	460 / 293	694 / 444	SMALL TOOL EXPERTISE REQUIRED	
Application	Cutting Tool [mm]		P	M	N	S
Drilling			0.5 - 2.0		0.5 - 3.0	
Milling	Single / 2 / 4 Flute Helical, Corner Radii		0.3 - 4.0		0.3 - 6.0	
Profiling	Ball-Nose [1]		0.3 - 6.0		0.3 - 6.0	
Chamfering			0.1 - 4.0		1.0 - 6.0	
Deburring	Lollipop [1]		0.1 - 4.0		1.0 - 6.0	
Profiling	Barrel		0.5 - 4.0		0.5 - 6.0	
Engraving (45-60°)			0.2 - 5.0		0.2 - 6.0	
FILES AVAILABLE FOR DOWNLOAD IN ONLINE CATALOGUE: https://colibrispindles.com/catalog/						
ADAPTER	C5/6	CAT 40/50	SK30/40	BT30/40	HSK-A40/A63	ER32/ST20

[1] Effective DC (DCap) - Cutting diameter at cutting depth ap

MORE SPEED / MORE TORQUE / MORE FLEXIBILITY

JET GENERIC INTERFACE FOR NEW ASSEMBLIES

Spindle Operating Data	TR G-JET	TR HPC-JET
Operating range of coolant pressure [bar]	20 - 40	**15** - 70
Minimum coolant flow rate [l/min]	10	10
Rotational spindle speed [Krpm]	35 - 55	21 - 45
Rotational direction	Right	
Optimum cutting tool diameter [mm] for Nonferrous Alloys	Drilling 0.1 - 2.0	Drilling 0.5 - 3.0
	Milling 0.1 - 3.0	Milling 0.2 - 6.0
Maximum tool shank diameter [mm]	6.0	6.0
Compatible adapter models	Rear and Front Clamping	

NEW

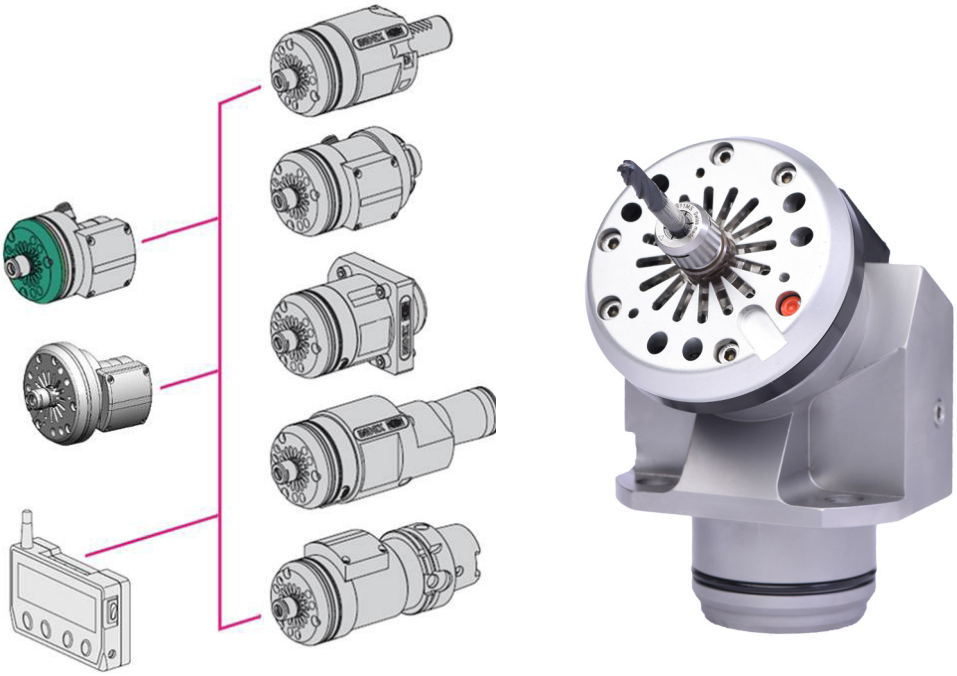

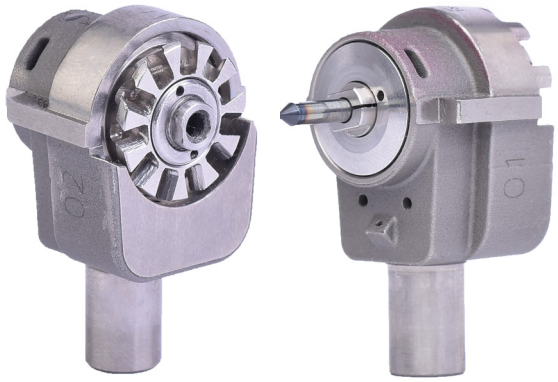

HIGH POWER MICRO JET SPINDLE

JET SPINDLE OPERATING PARAMETERS				MICRO90 JET
High Pressure Coolant (BAR)	20	40	Terms of Use	
Min Tube Diameter	4 mm		**Collect**	1.6, 2.0, 3.0, 3.175 mm
Min Flow Rate (L/min)	10	20	**Accessories**	ERXX SEAL 10 AA
Idle Speed (RPM)	35,000	53,000	**Warranty**	
				SMALL TOOL EXPERTISE REQUIRED

Cutter [mm]	P	M	N	S
Drilling	0.1 - 2.0			
Ball-Nose	0.1 - 3.0			
Chamfering	0.1 - 3.0			
Lollipop	0.1 - 3.0			
Barrel	0.5 - 3.0			
Helical			0.1 - 2.0	
Engraving	0.1 - 3.0			

FILES AVAILABLE FOR DOWNLOAD IN ONLINE CATALOGUE: https://colibrispindles.com/catalog/

Primary View 2D – DXF	Model 3D Detail – STP	Drawing - PDF

APPLICATIONS

- Finishing & semi-finishing processes
- Small tools drilling and milling processes
- Special emphasis on the internal machining of parts
- Ideal for hard to reach places

Example of clamping with ER16

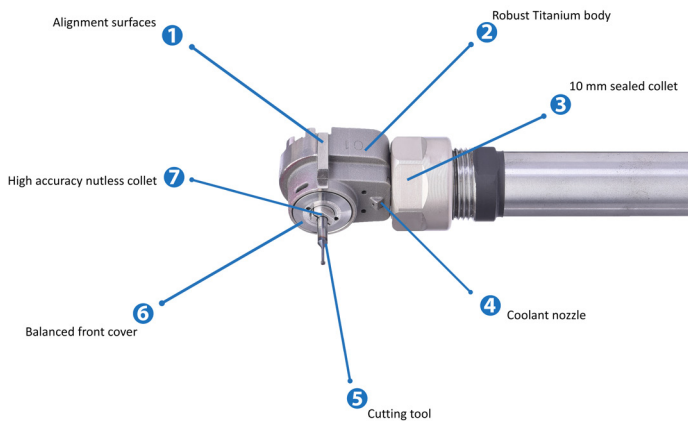

HIGH SPEED MACHINED PARTS

HPC Engraving & Chamfering

GJET Engraving

HPC Profiling

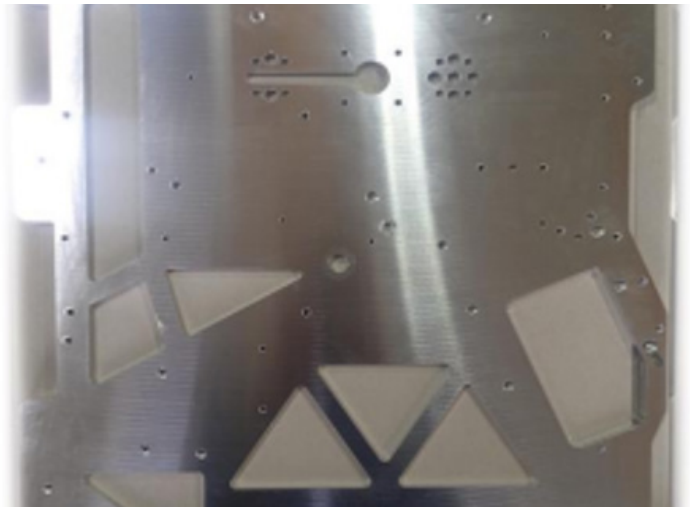

GJET Slot Milling & Drilling

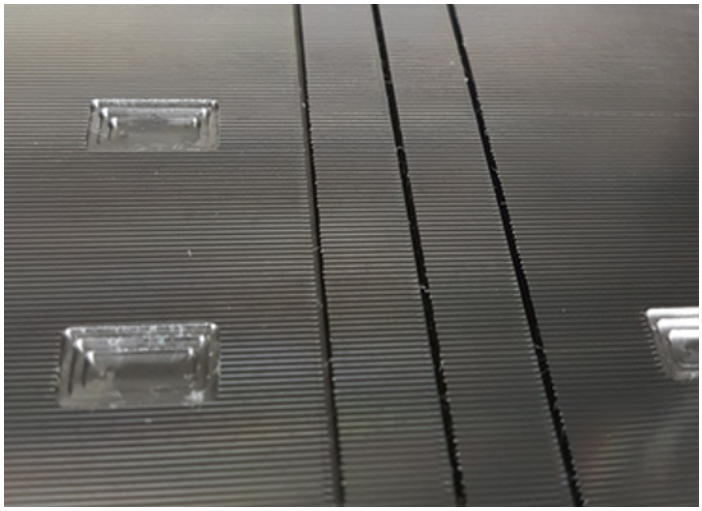

HPC Pocket, Slot & Plan Milling

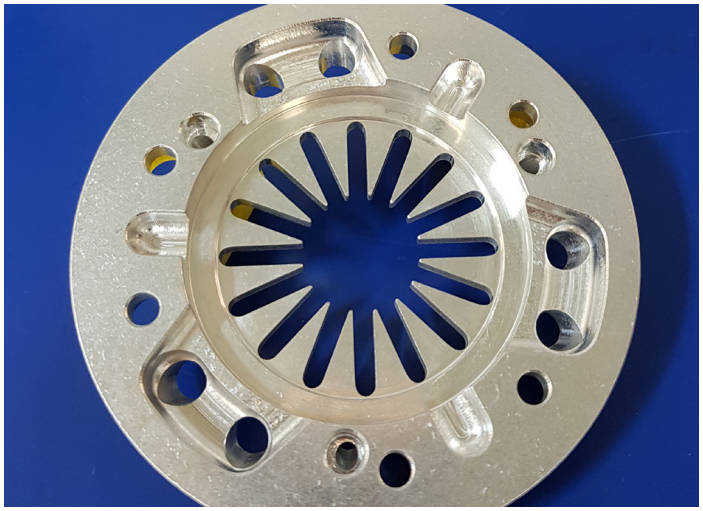

HPC Slot & Helical Milling

HSM Jet Spindle

Quick Start - Technical Guide

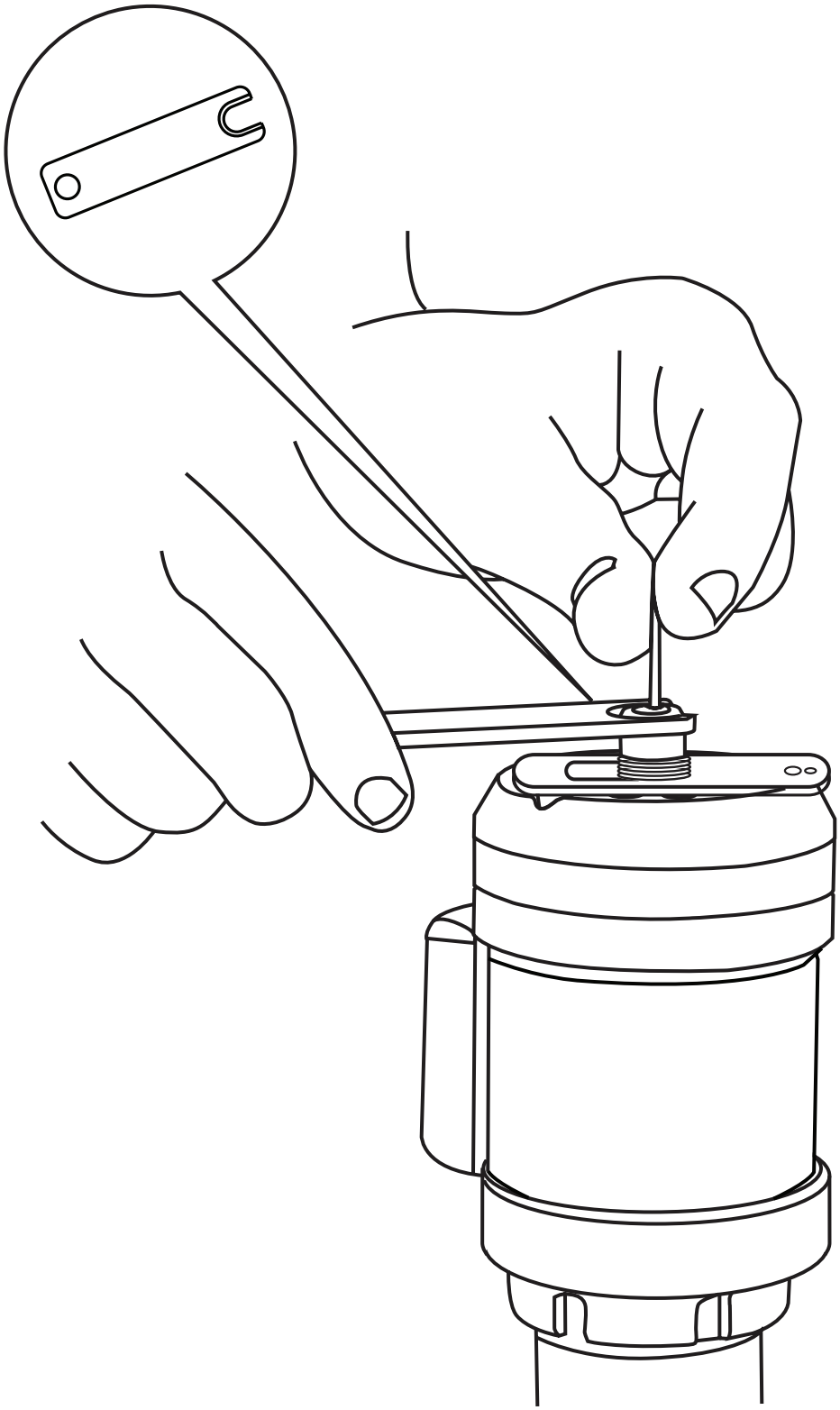

COLIBRI
SPINDLES

HSM Jet Spindle | Quick Start

Box Contents

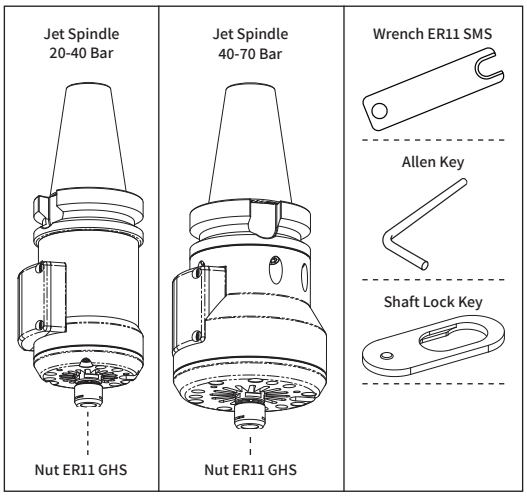

1. Insert Battery

1.A. Open battery compartment by removing the 4 screws with the supplied allen key.

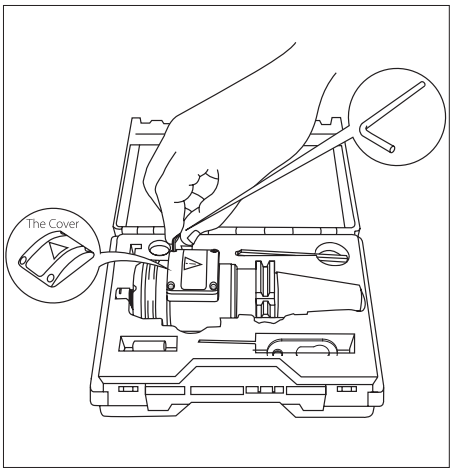

1.B. Use moderate pressure to insert the lithium CR2 3V battery.

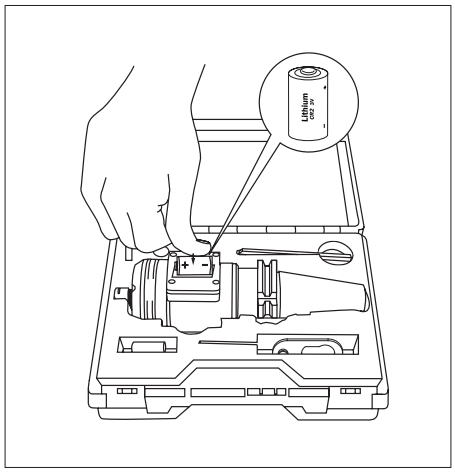

1.C. Replace screws to close the battery compartment.

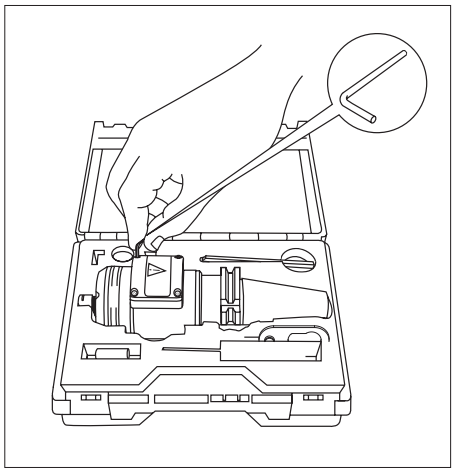

*Immediately connect to the display in order to save the battery.

2. Connecting the Display

2.A. Connect the display to the external power and switch ON, then press the CONNECT button on the left.

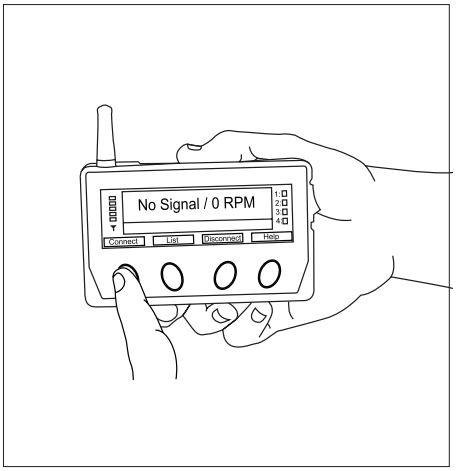

2.B. First press the CONNECT button, then slide the transmitter across the left side of the display from point 1 to point 2.

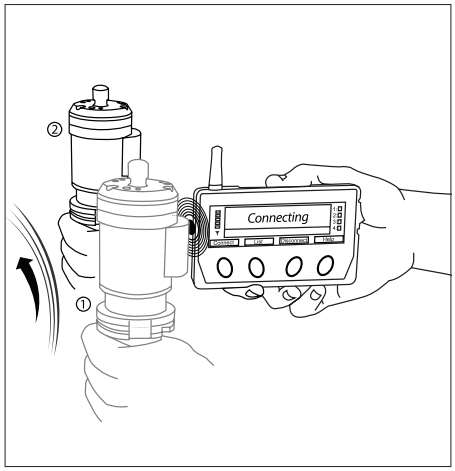

*If side magnet does not make a connection, use magnets on the back of the display unit.

2.C. “Connected” indication will appear after successful connection to the spindle.

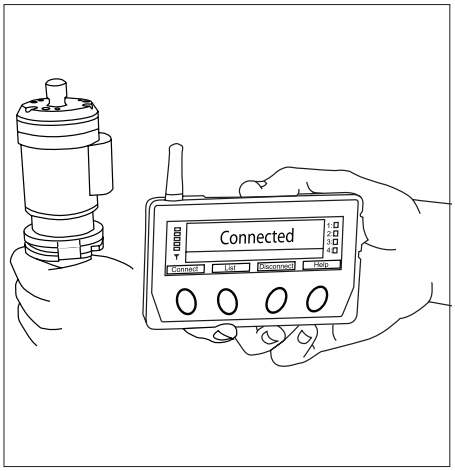

3. Clamping the Cutting Tool

3.A. If using an ER32 built-in adaptor, loosen the clamping nut on the adaptor and turn 1.5 rotations counter clockwise.

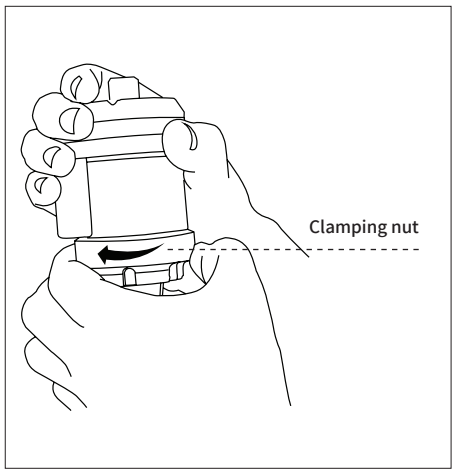

*For specific instructions for different adaptations, see the HSM Jet Spindle user manual.

3.B. Place a specific tool adaptor with ER32 collet chuck into the tool clamping device and release the original ER32 Nut.

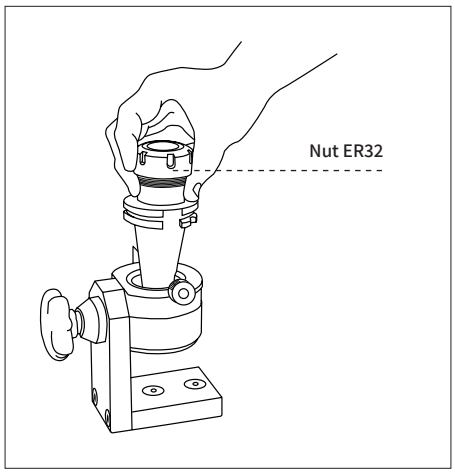

3.C. Set the ER32 built-in adaptor into the tool holder collet chuck and fasten the clamping nut.

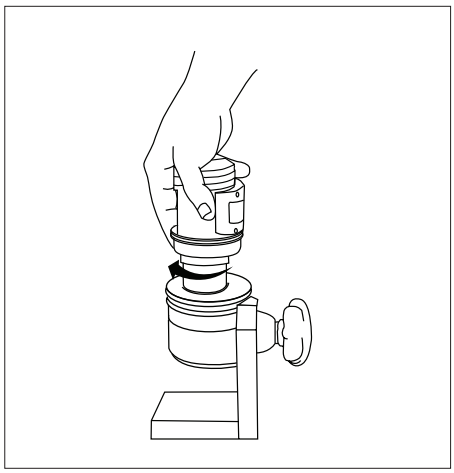

3.D. First assemble the ER 11 AA collet and tool. Insert nut for tightening. Align flat sides of the shaft with the positioning slot on the spindle cover.

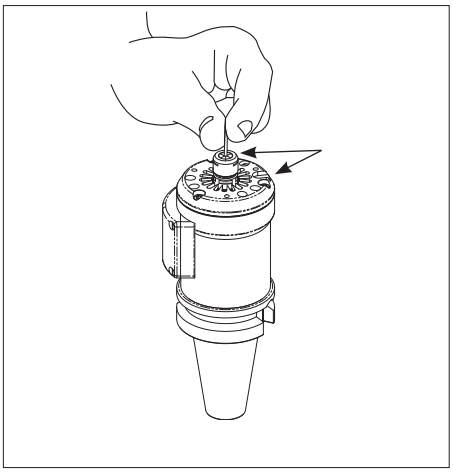

3.E. Position shaft lock key over the nut. Raised button fits into the positioning slot underneath.

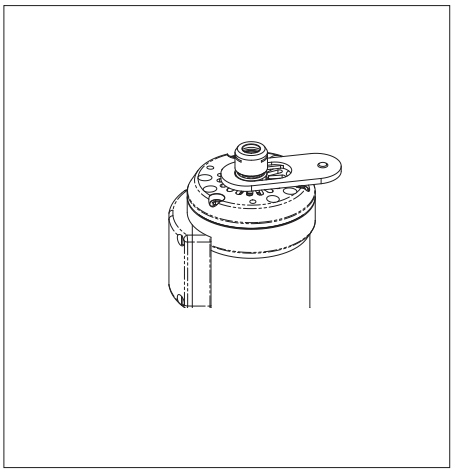

3.F. Slide shaft lock key to secure it in place.

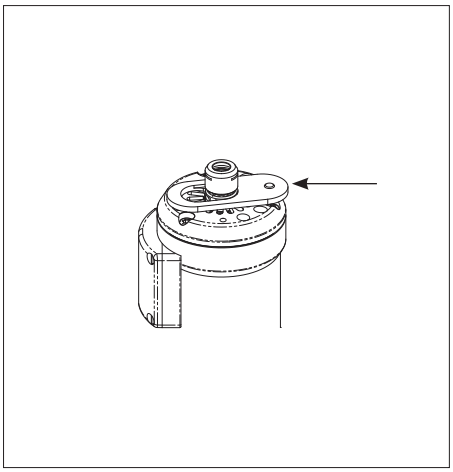

3. Clamping the Cutting Tool (continued)

3.G. Insert ER11 wrench into the grooves on the Nut. Turn ER11 wrench clockwise to tighten.

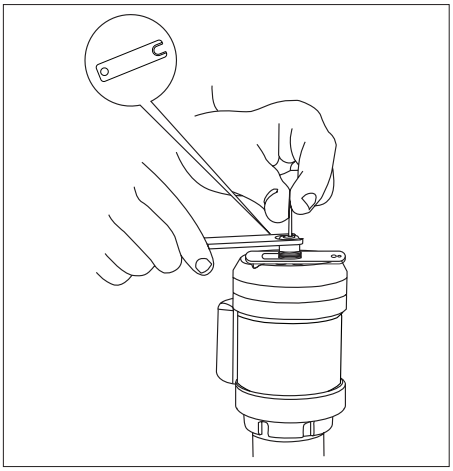

3.H. The Jet Spindle is now ready to mount on the machine, the same as any other standard tool.

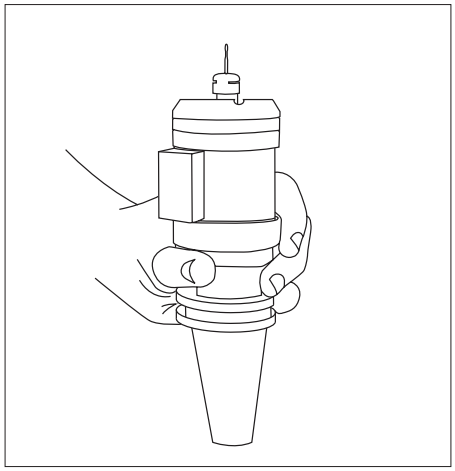

* Don't forget to lock the main machine spindle during Jet Spindle operation.

To Remove a Tool:

- Slide the shaft lock flat key to unlock.
- Insert the wrench and turn counterclockwise to loosen the nut (this may take a few turns).
- Keep the shaft lock in the secure position if you wish to insert a new tool.

Milling & Drilling with Jet Spindles

Slot Milling Formula

Use a High Speed Slot/Shoulder Milling Strategy as follows:
First step – slot mill with an Ae of 60% of the final slot diameter and an Ap of 30% of end-mill diameter
Second Step – shoulder mill with an Ae of the remaining 40% of final slot diameter and a equivalent Ap of 30% of the end-mill diameter.
Repeat first and second step until you complete the slot.

F(z) according to the "Jet Spindles Cutting Conditions Table", classified by: Tool diameter, Material, Speed

Slot Milling with Jet Spindles – working method

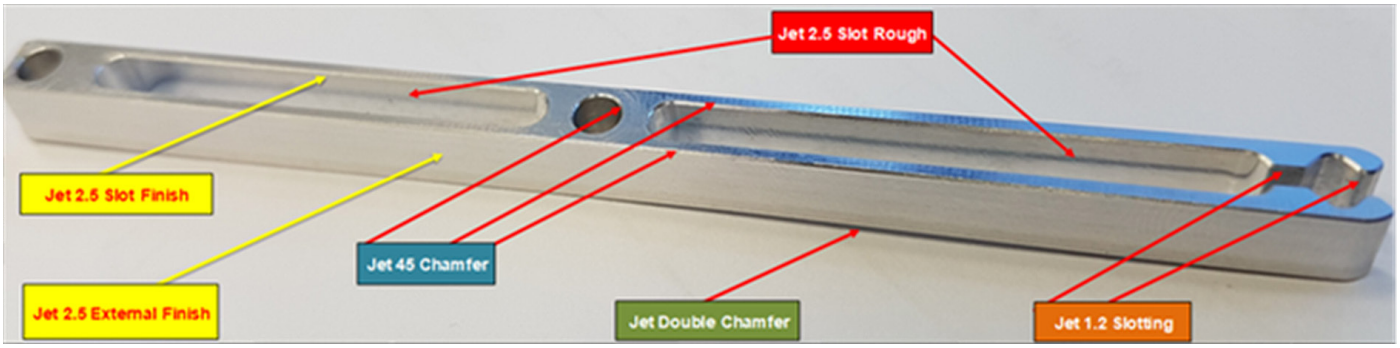

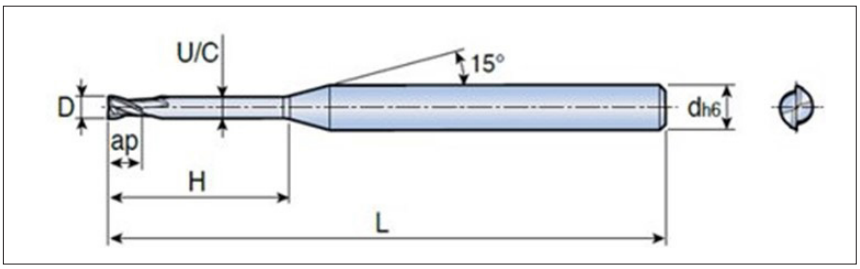

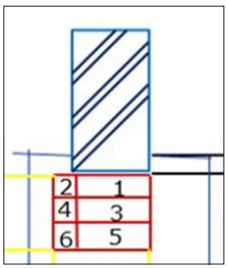

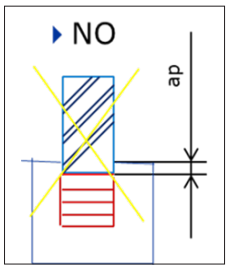

Profile Milling Formula

Ball nose geometry and Ap values determined the effective Dap – see equation
Finishing steps cutting conditions are usually correlated:
Ap or Dap = Ae
To achieve better Surface-finish, Ae should be minimum, and Feed will be according to the F(z) "Jet Spindles Cutting Conditions Table" recommendations – Material, Speed, Diameter

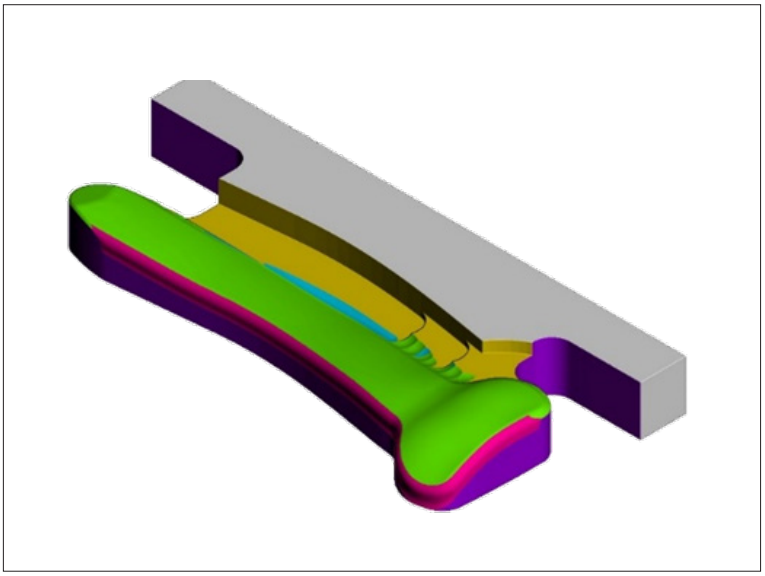

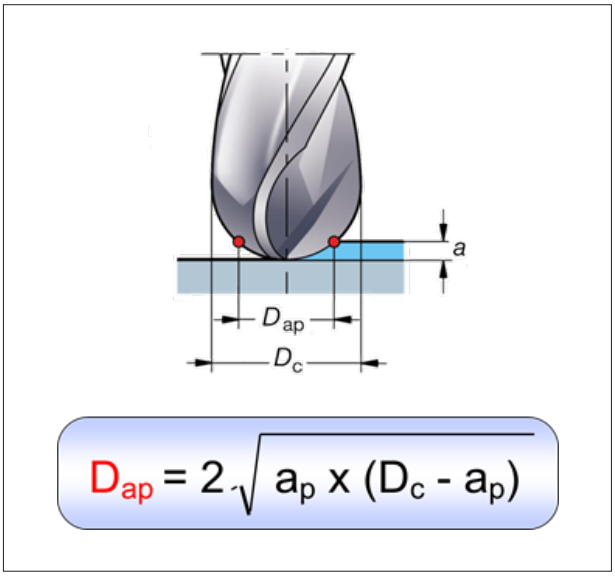

Drilling Formula
High Speed drill non-ferrous materials with a highly polished spiral tool.
First step – on inclined surfaces preparation with a flat drill or end-mill is mandatory.
Second step – drill until Q1=D according to the F(z) from the "Jet Spindles Operating Data" tables, classified by: Tool diameter, Material, Speed.
Third step - peck drill with Qx = Ap values from the Cutting conditions table. After each peck drill extract to position Q1 for chip evacuation.

Drilling Process for Small Drills

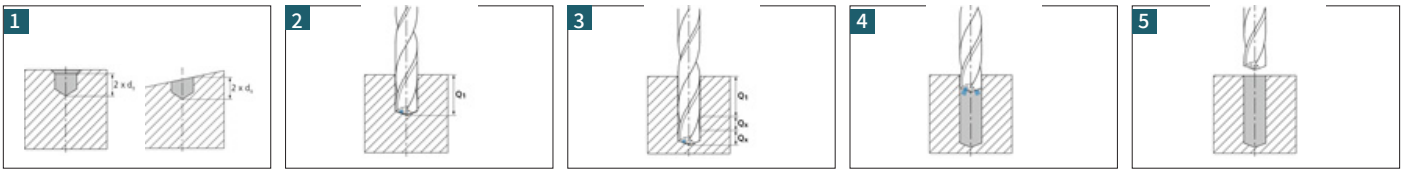

Incline surfaces require a flat drill | First Step: Drill until Depth of Q1 | Pecking steps according to Qx value - extract each time to Q1 to evacuate the chips | Extract to position 1 x D (Q1) at 500 mm/min or rapid feed. Never extract drill tip from hole | Extract the tip from the hole with vf = 500 mm/min

10% Speed Drop Rule

As the cutting tool enters the work piece, RPMs decrease due to load.
The Jet Spindle RPM value when working should not drop more than 10% of the RPM value registered at 'idle speed'.

TO REGISTER IDLE SPEED:

1. Mount Jet Spindle on the machine with cutting tool inserted.
2. Turn on fluid pressure and note RPM on the display monitor.

In the EXAMPLE, following the 10% rule: If idle speed is 40,000 RPM then during machining the jet spindle speed should decrease to a minimum of 36,000 RPM. If however, spindle speed decreases to less than 36,000 RPM, then both depth of cut (Ap) and feed (Fz) need to be reduced. Refer to Operating Data tables below.

30% Feed Rate Rule

Q: How to start with a good setup?
A: Implement the 30% feed rate Rule

After updating the CNC Program with the recommended Ae, Ap, and Feed rate values:

First step – operate the Jet spindle coolant and record the idle speed value.
Second step – change the Feed Dial (F) on the control panel to 30% value.
Third step – start operation with Jet spindle and record spindle speed value.
Forth step – spindle speed drop should be a reduction of 3% from Idle speed.
Fifth step – if the spindle speed drop is correct, add 20% on the Feed Dial (F), i.e. proceed to 50% feed rate and record the new speed value
Six step – if the spindle speed drop is 5%, then proceed with adding an additional 20% on the Feed Dial (F) reaching 70% feed rate and record the new jet spindle speed value
Seven step – if the spindle speed drop is 7%, then proceed with adding an additional 30% on the Feed Dial (F) reaching 100% of the recommended feed value which should coincide with a maximum spindle speed drop of 10%.
Once the spindle speed drop is a maximum of 10%, save these values in the CNC program.
Eight step – If you face a major speed drop, while adding Feed, you better immediately reduce Ap value by 20% in the CNC Program and refer to Operating Data tables before running the setup again.

HPCJET Operating Data

	Material	Process	Type	Cutting Tool dia.	Hardness	Pressure	Speed (n)	Ae (mm)	Ap (mm)	Fz (mm)
N	Al-Si 9%	Drilling	Drill	0.3	100-120 HB	15	22000	0.3	0.025	0.002
	Al-Si 9%	Drilling	Drill	0.3	100-120 HB	20	25000	0.3	0.027	0.002
	Al-Si 9%	Drilling	Drill	0.3	100-120 HB	40	35000	0.3	0.027	0.002
	Al-Si 9%	Drilling	Drill	0.3	100-120 HB	70	45000	0.3	0.027	0.002
	Al-Si 9%	Drilling	Drill	0.5	100-120 HB	15	22000	0.5	0.05	0.003
	Al-Si 9%	Drilling	Drill	0.5	100-120 HB	20	25000	0.5	0.05	0.003
	Al-Si 9%	Drilling	Drill	0.5	100-120 HB	40	35000	0.5	0.1	0.003
	Al-Si 9%	Drilling	Drill	0.5	100-120 HB	70	45000	0.3	0.027	0.003
	Al-Si 9%	Drilling	Drill	0.8	100-120 HB	15	22000	0.8	0.1	0.003
	Al-Si 9%	Drilling	Drill	0.8	100-120 HB	20	25000	0.8	0.15	0.003
	Al-Si 9%	Drilling	Drill	0.8	100-120 HB	40	35000	0.8	0.15	0.003
	Al-Si 9%	Drilling	Drill	0.8	100-120 HB	70	45000	0.8	0.027	0.003
	Al-Si 9%	Drilling	Drill	1	100-120 HB	15	22000	1	0.3	0.008
	Al-Si 9%	Drilling	Drill	1	100-120 HB	20	25000	1	0.3	0.008
	Al-Si 9%	Drilling	Drill	1	100-120 HB	40	35000	1	0.3	0.008
	Al-Si 9%	Drilling	Drill	1	100-120 HB	70	45000	1	0.027	0.008
	Al-Si 9%	Drilling	Drill	1.5	100-120 HB	15	22000	1.5	0.15	0.008
	Al-Si 9%	Drilling	Drill	1.5	100-120 HB	20	25000	1.5	0.2	0.008
	Al-Si 9%	Drilling	Drill	1.5	100-120 HB	40	35000	1.5	0.25	0.008
	Al-Si 9%	Drilling	Drill	1.5	100-120 HB	70	45000	1.5	0.027	0.008
	Al-Si 9%	Drilling	Drill	2	100-120 HB	15	22000	2	0.2	0.008
	Al-Si 9%	Drilling	Drill	2	100-120 HB	20	25000	2	0.25	0.008
	Al-Si 9%	Drilling	Drill	2	100-120 HB	40	35000	2	0.3	0.008
	Al-Si 9%	Drilling	Drill	2	100-120 HB	70	45000	2	0.027	0.008
	Al-Si 9%	Drilling	Drill	3	100-120 HB	15	22000	3	0.25	0.008
	Al-Si 9%	Drilling	Drill	3	100-120 HB	20	25000	3	0.3	0.008
	Al-Si 9%	Drilling	Drill	3	100-120 HB	40	35000	3	0.35	0.008
	Al-Si 9%	Drilling	Drill	3	100-120 HB	70	45000	3	0.027	0.008
	Al-Si 9%	Drilling	Drill	4	100-120 HB	15	22000	4	0.2	0.008
	Al-Si 9%	Drilling	Drill	4	100-120 HB	20	25000	4	0.25	0.01
	Al-Si 9%	Drilling	Drill	4	100-120 HB	40	35000	4	0.25	0.01
	Al-Si 9%	Drilling	Drill	4	100-120 HB	70	45000	4	0.027	0.008
	Al-Si 9%	Drilling	Drill	5	100-120 HB	15	22000	5	0.2	0.01
	Al-Si 9%	Drilling	Drill	5	100-120 HB	20	25000	5	0.2	0.01
	Al-Si 9%	Drilling	Drill	5	100-120 HB	40	35000	5	0.2	0.01
	Al-Si 9%	Drilling	Drill	5	100-120 HB	70	45000	5	0.027	0.01
	Al-Si 9%	Drilling	Drill	6	100-120 HB	15	22000	6	0.3	0.01
	Al-Si 9%	Drilling	Drill	6	100-120 HB	20	25000	6	0.3	0.01
	Al-Si 9%	Drilling	Drill	6	100-120 HB	40	35000	6	0.3	0.01
	Al-Si 9%	Drilling	Drill	6	100-120 HB	70	45000	6	0.027	0.01
	Al-Si 9%	Profile Milling	Ball Nose	0.5	100-120 HB	15	22000	0.06	0.05	0.008
	Al-Si 9%	Profile Milling	Ball Nose	0.5	100-120 HB	20	25000	0.06	0.05	0.01
	Al-Si 9%	Profile Milling	Ball Nose	0.5	100-120 HB	40	35000	0.07	0.13	0.012
	Al-Si 9%	Profile Milling	Ball Nose	0.5	100-120 HB	70	45000	0.07	0.13	0.012
	Al-Si 9%	Profile Milling	Ball Nose	0.8	100-120 HB	15	22000	0.06	0.05	0.008
	Al-Si 9%	Profile Milling	Ball Nose	0.8	100-120 HB	20	25000	0.06	0.05	0.01
	Al-Si 9%	Profile Milling	Ball Nose	0.8	100-120 HB	40	35000	0.07	0.13	0.012
	Al-Si 9%	Profile Milling	Ball Nose	0.8	100-120 HB	70	45000	0.07	0.13	0.012
	Al-Si 9%	Profile Milling	Ball Nose	1	100-120 HB	15	22000	0.1	0.075	0.004
	Al-Si 9%	Profile Milling	Ball Nose	1	100-120 HB	20	25000	0.1	0.075	0.004
	Al-Si 9%	Profile Milling	Ball Nose	1	100-120 HB	40	35000	0.11	0.15	0.004
	Al-Si 9%	Profile Milling	Ball Nose	1	100-120 HB	70	45000	0.07	0.13	0.012
	Al-Si 9%	Profile Milling	Ball Nose	1.5	100-120 HB	15	22000	0.12	0.08	0.006
	Al-Si 9%	Profile Milling	Ball Nose	1.5	100-120 HB	20	25000	0.13	0.09	0.006
	Al-Si 9%	Profile Milling	Ball Nose	1.5	100-120 HB	40	35000	0.15	0.15	0.006
	Al-Si 9%	Profile Milling	Ball Nose	1.5	100-120 HB	70	45000	0.07	0.13	0.012
	Al-Si 9%	Profile Milling	Ball Nose	2	100-120 HB	15	22000	0.15	0.05	0.003
	Al-Si 9%	Profile Milling	Ball Nose	2	100-120 HB	20	25000	0.16	0.05	0.003
	Al-Si 9%	Profile Milling	Ball Nose	2	100-120 HB	40	35000	0.2	0.13	0.003
	Al-Si 9%	Profile Milling	Ball Nose	2	100-120 HB	70	45000	0.07	0.13	0.012
	Al-Si 9%	Profile Milling	Ball Nose	2.5	100-120 HB	15	22000	0.15	0.05	0.003
	Al-Si 9%	Profile Milling	Ball Nose	2.5	100-120 HB	20	25000	0.16	0.05	0.003
	Al-Si 9%	Profile Milling	Ball Nose	2.5	100-120 HB	40	35000	0.25	0.13	0.003
	Al-Si 9%	Profile Milling	Ball Nose	2.5	100-120 HB	70	45000	0.07	0.13	0.012
	Al-Si 9%	Profile Milling	Ball Nose	3	100-120 HB	15	22000	0.22	0.075	0.004
	Al-Si 9%	Profile Milling	Ball Nose	3	100-120 HB	20	25000	0.25	0.075	0.004
	Al-Si 9%	Profile Milling	Ball Nose	3	100-120 HB	40	35000	0.25	0.15	0.004
	Al-Si 9%	Profile Milling	Ball Nose	3	100-120 HB	70	45000	0.07	0.13	0.012
	Al-Si 9%	Profile Milling	Ball Nose	4	100-120 HB	15	22000	0.2	0.08	0.006
	Al-Si 9%	Profile Milling	Ball Nose	4	100-120 HB	20	25000	0.25	0.09	0.006
	Al-Si 9%	Profile Milling	Ball Nose	4	100-120 HB	40	35000	0.27	0.15	0.006
	Al-Si 9%	Profile Milling	Ball Nose	4	100-120 HB	70	45000	0.07	0.13	0.012
	Al-Si 9%	Profile Milling	Ball Nose	5	100-120 HB	15	22000	0.25	0.075	0.004
	Al-Si 9%	Profile Milling	Ball Nose	5	100-120 HB	20	25000	0.26	0.075	0.004
	Al-Si 9%	Profile Milling	Ball Nose	5	100-120 HB	40	35000	0.28	0.15	0.004
	Al-Si 9%	Profile Milling	Ball Nose	5	100-120 HB	70	45000	0.07	0.13	0.012
	Al-Si 9%	Profile Milling	Ball Nose	6	100-120 HB	15	22000	0.23	0.08	0.006
	Al-Si 9%	Profile Milling	Ball Nose	6	100-120 HB	20	25000	0.25	0.09	0.006
	Al-Si 9%	Profile Milling	Ball Nose	6	100-120 HB	40	35000	0.25	0.15	0.006
	Al-Si 9%	Profile Milling	Ball Nose	6	100-120 HB	70	45000	0.07	0.13	0.012
	Al-Si 9%	Slot Milling	End-Mill	0.5	100-120 HB	15	22000	0.5	0.1	0.007
	Al-Si 9%	Slot Milling	End-Mill	0.5	100-120 HB	20	25000	0.5	0.1	0.007
	Al-Si 9%	Slot Milling	End-Mill	0.5	100-120 HB	40	35000	0.5	0.1	0.007
	Al-Si 9%	Slot Milling	End-Mill	0.5	100-120 HB	70	45000	0.5	0.1	0.007
	Al-Si 9%	Slot Milling	End-Mill	0.8	100-120 HB	15	22000	0.8	0.16	0.008
	Al-Si 9%	Slot Milling	End-Mill	0.8	100-120 HB	20	25000	0.8	0.16	0.008
	Al-Si 9%	Slot Milling	End-Mill	0.8	100-120 HB	40	35000	0.8	0.16	0.008
	Al-Si 9%	Slot Milling	End-Mill	0.8	100-120 HB	70	45000	0.8	0.16	0.007
	Al-Si 9%	Slot Milling	End-Mill	1	100-120 HB	15	22000	1	0.2	0.02
	Al-Si 9%	Slot Milling	End-Mill	1	100-120 HB	20	25000	1	0.2	0.02
	Al-Si 9%	Slot Milling	End-Mill	1	100-120 HB	40	35000	1	0.2	0.02
	Al-Si 9%	Slot Milling	End-Mill	1	100-120 HB	70	45000	1	0.2	0.007
	Al-Si 9%	Slot Milling	End-Mill	1.5	100-120 HB	15	22000	1.5	0.3	0.02
	Al-Si 9%	Slot Milling	End-Mill	1.5	100-120 HB	20	25000	1.5	0.3	0.02
	Al-Si 9%	Slot Milling	End-Mill	1.5	100-120 HB	40	35000	1.5	0.3	0.02
	Al-Si 9%	Slot Milling	End-Mill	1.5	100-120 HB	70	45000	1.5	0.3	0.007
	Al-Si 9%	Slot Milling	End-Mill	2	100-120 HB	15	22000	2	0.4	0.022
	Al-Si 9%	Slot Milling	End-Mill	2	100-120 HB	20	25000	2	0.4	0.022
	Al-Si 9%	Slot Milling	End-Mill	2	100-120 HB	40	35000	2	0.4	0.022
	Al-Si 9%	Slot Milling	End-Mill	2	100-120 HB	70	45000	2	0.4	0.007
	Al-Si 9%	Slot Milling	End-Mill	2.5	100-120 HB	15	22000	2.5	0.5	0.025
	Al-Si 9%	Slot Milling	End-Mill	2.5	100-120 HB	20	25000	2.5	0.5	0.025
	Al-Si 9%	Slot Milling	End-Mill	2.5	100-120 HB	40	35000	2.5	0.5	0.025
	Al-Si 9%	Slot Milling	End-Mill	2.5	100-120 HB	70	45000	2.5	0.5	0.007
	Al-Si 9%	Slot Milling	End-Mill	3	100-120 HB	15	22000	3	0.6	0.025
	Al-Si 9%	Slot Milling	End-Mill	3	100-120 HB	20	25000	3	0.6	0.025
	Al-Si 9%	Slot Milling	End-Mill	3	100-120 HB	40	35000	3	0.6	0.025
	Al-Si 9%	Slot Milling	End-Mill	3	100-120 HB	70	45000	3	0.6	0.007
	Al-Si 9%	Slot Milling	End-Mill	3.5	100-120 HB	15	22000	3.5	0.7	0.025
	Al-Si 9%	Slot Milling	End-Mill	3.5	100-120 HB	20	25000	3.5	0.7	0.025
	Al-Si 9%	Slot Milling	End-Mill	3.5	100-120 HB	40	35000	3.5	0.7	0.025
	Al-Si 9%	Slot Milling	End-Mill	3.5	100-120 HB	70	45000	3.5	0.7	0.007
	Al-Si 9%	Slot Milling	End-Mill	4	100-120 HB	15	22000	4	0.8	0.025
	Al-Si 9%	Slot Milling	End-Mill	4	100-120 HB	20	25000	4	0.8	0.025
	Al-Si 9%	Slot Milling	End-Mill	4	100-120 HB	40	35000	4	0.8	0.025
	Al-Si 9%	Slot Milling	End-Mill	4	100-120 HB	70	45000	4	0.8	0.007
	Al-Si 9%	Slot Milling	End-Mill	4.5	100-120 HB	15	22000	4.5	0.9	0.025

	Material	Process	Type	Cutting Tool dia.	Hardness	Pressure	Speed (n)	Ae (mm)	Ap (mm)	Fz (mm)
N	Al-Si 9%	Slot Milling	End-Mill	4.5	100-120 HB	20	25000	4.5	0.9	0.025
	Al-Si 9%	Slot Milling	End-Mill	4.5	100-120 HB	40	35000	4.5	0.9	0.025
	Al-Si 9%	Slot Milling	End-Mill	4.5	100-120 HB	70	45000	4.5	0.9	0.007
	Al-Si 9%	Slot Milling	End-Mill	5	100-120 HB	15	22000	5	1	0.022
	Al-Si 9%	Slot Milling	End-Mill	5	100-120 HB	20	25000	5	1	0.022
	Al-Si 9%	Slot Milling	End-Mill	5	100-120 HB	40	35000	5	1	0.022
	Al-Si 9%	Slot Milling	End-Mill	5	100-120 HB	70	45000	5	1	0.007
	Al-Si 9%	Slot Milling	End-Mill	5.5	100-120 HB	15	22000	5.5	1.1	0.022
	Al-Si 9%	Slot Milling	End-Mill	5.5	100-120 HB	20	25000	5.5	1.1	0.022
	Al-Si 9%	Slot Milling	End-Mill	5.5	100-120 HB	40	35000	5.5	1.1	0.022
	Al-Si 9%	Slot Milling	End-Mill	5.5	100-120 HB	70	45000	5.5	1.1	0.007
	Al-Si 9%	Slot Milling	End-Mill	6	100-120 HB	15	22000	6	1.2	0.022
	Al-Si 9%	Slot Milling	End-Mill	6	100-120 HB	20	25000	6	1.2	0.022
	Al-Si 9%	Slot Milling	End-Mill	6	100-120 HB	40	35000	6	1.2	0.022
	Al-Si 9%	Slot Milling	End-Mill	6	100-120 HB	70	45000	6	1.2	0.007
	Al-Si 9%	Shoulder Mill	End-Mill	1	100-120 HB	15	22000	0.2	0.1	0.015
	Al-Si 9%	Shoulder Mill	End-Mill	1	100-120 HB	20	25000	0.2	0.15	0.017
	Al-Si 9%	Shoulder Mill	End-Mill	1	100-120 HB	40	35000	0.2	0.15	0.017
	Al-Si 9%	Shoulder Mill	End-Mill	1	100-120 HB	70	45000	0.2	0.15	0.017
	Al-Si 9%	Shoulder Mill	End-Mill	2	100-120 HB	15	22000	0.4	0.1	0.015
	Al-Si 9%	Shoulder Mill	End-Mill	2	100-120 HB	20	25000	0.4	0.1	0.015
	Al-Si 9%	Shoulder Mill	End-Mill	2	100-120 HB	40	35000	0.4	0.1	0.018
	Al-Si 9%	Shoulder Mill	End-Mill	2	100-120 HB	70	45000	0.4	0.15	0.017
	Al-Si 9%	Shoulder Mill	End-Mill	3	100-120 HB	15	22000	0.6	0.1	0.02
	Al-Si 9%	Shoulder Mill	End-Mill	3	100-120 HB	20	25000	0.6	0.15	0.02
	Al-Si 9%	Shoulder Mill	End-Mill	3	100-120 HB	40	35000	0.6	0.25	0.025
	Al-Si 9%	Shoulder Mill	End-Mill	3	100-120 HB	70	45000	0.6	0.15	0.017
	Al-Si 9%	Shoulder Mill	End-Mill	4	100-120 HB	15	22000	0.8	0.1	0.015
	Al-Si 9%	Shoulder Mill	End-Mill	4	100-120 HB	20	25000	0.8	0.1	0.015
	Al-Si 9%	Shoulder Mill	End-Mill	4	100-120 HB	40	35000	0.8	0.1	0.015
	Al-Si 9%	Shoulder Mill	End-Mill	4	100-120 HB	70	45000	0.8	0.15	0.017
	Al-Si 9%	Shoulder Mill	End-Mill	5	100-120 HB	15	22000	1	0.1	0.02
	Al-Si 9%	Shoulder Mill	End-Mill	5	100-120 HB	20	25000	1	0.13	0.02
	Al-Si 9%	Shoulder Mill	End-Mill	5	100-120 HB	40	35000	1	0.15	0.025
	Al-Si 9%	Shoulder Mill	End-Mill	5	100-120 HB	70	45000	1	0.15	0.017
	Al-Si 9%	Shoulder Mill	End-Mill	6	100-120 HB	15	22000	1.2	0.1	0.02
	Al-Si 9%	Shoulder Mill	End-Mill	6	100-120 HB	20	25000	0.8	0.1	0.02
	Al-Si 9%	Shoulder Mill	End-Mill	6	100-120 HB	40	35000	1.2	0.1	0.02
	Al-Si 9%	Shoulder Mill	End-Mill	6	100-120 HB	70	45000	1.2	0.15	0.017

	Material	Process	Type	Cutting Tool dia.	Hardness	Pressure	Speed (n)	Ae (mm)	Ap (mm)	Fz (mm)
H	SAE 1.2316	Drilling	Drill	0.3	35 HRC	15	22000	0.3	0.07	0.002
	SAE 1.2316	Drilling	Drill	0.3	35 HRC	20	25000	0.3	0.07	0.002
	SAE 1.2316	Drilling	Drill	0.3	35 HRC	40	35000	0.3	0.07	0.002
	SAE 1.2316	Drilling	Drill	0.3	35 HRC	70	45000	0.3	0.07	0.006
	SAE 1.2316	Drilling	Drill	0.5	35 HRC	15	22000	0.5	0.1	0.004
	SAE 1.2316	Drilling	Drill	0.5	35 HRC	20	25000	0.5	0.1	0.004
	SAE 1.2316	Drilling	Drill	0.5	35 HRC	40	35000	0.5	0.1	0.004
	SAE 1.2316	Drilling	Drill	0.5	35 HRC	70	45000	0.5	0.07	0.004
	SAE 1.2316	Drilling	Drill	0.8	35 HRC	15	22000	0.8	0.1	0.006
	SAE 1.2316	Drilling	Drill	0.8	35 HRC	20	25000	0.8	0.1	0.006
	SAE 1.2316	Drilling	Drill	0.8	35 HRC	40	35000	0.8	0.1	0.006
	SAE 1.2316	Drilling	Drill	0.8	35 HRC	70	45000	0.8	0.07	0.006
	SAE 1.2316	Drilling	Drill	1	35 HRC	15	22000	1	0.1	0.006
	SAE 1.2316	Drilling	Drill	1	35 HRC	20	25000	1	0.1	0.006
	SAE 1.2316	Drilling	Drill	1	35 HRC	40	35000	1	0.1	0.006
	SAE 1.2316	Drilling	Drill	1	35 HRC	70	45000	1	0.07	0.006
	SAE 1.2316	Drilling	Drill	1.5	35 HRC	15	22000	1.5	0.1	0.006
	SAE 1.2316	Drilling	Drill	1.5	35 HRC	20	25000	1.5	0.1	0.006
	SAE 1.2316	Drilling	Drill	1.5	35 HRC	40	35000	1.5	0.1	0.006
	SAE 1.2316	Drilling	Drill	1.5	35 HRC	70	45000	1.5	0.07	0.006
	SAE 1.2316	Drilling	Drill	2	35 HRC	15	22000	2	0.1	0.01
	SAE 1.2316	Drilling	Drill	2	35 HRC	20	25000	2	0.1	0.01
	SAE 1.2316	Drilling	Drill	2	35 HRC	40	35000	2	0.1	0.01
	SAE 1.2316	Drilling	Drill	2	35 HRC	70	45000	2	0.07	0.006
	SAE 1.2316	Drilling	Drill	2.5	35 HRC	15	22000	2.5	0.1	0.01
	SAE 1.2316	Drilling	Drill	2.5	35 HRC	20	25000	2.5	0.1	0.01
	SAE 1.2316	Drilling	Drill	2.5	35 HRC	40	35000	2.5	0.1	0.01
	SAE 1.2316	Drilling	Drill	2.5	35 HRC	70	45000	2.5	0.07	0.006
	SAE 1.2316	Drilling	Drill	3	35 HRC	15	22000	3	0.1	0.01
	SAE 1.2316	Drilling	Drill	3	35 HRC	20	25000	3	0.1	0.01
	SAE 1.2316	Drilling	Drill	3	35 HRC	40	35000	3	0.1	0.01
	SAE 1.2316	Drilling	Drill	3	35 HRC	70	45000	3	0.07	0.006
	SAE 1.2316	Drilling	Drill	3.5	35 HRC	15	22000	3.5	0.1	0.01
	SAE 1.2316	Drilling	Drill	3.5	35 HRC	20	25000	3.5	0.1	0.01
	SAE 1.2316	Drilling	Drill	3.5	35 HRC	40	35000	3.5	0.1	0.01
	SAE 1.2316	Drilling	Drill	3.5	35 HRC	70	45000	3.5	0.07	0.006
	SAE 1.2316	Profile Milling	Ball Nose	0.3	35 HRC	15	22000	0.03	0.018	0.01
	SAE 1.2316	Profile Milling	Ball Nose	0.3	35 HRC	20	25000	0.03	0.018	0.01
	SAE 1.2316	Profile Milling	Ball Nose	0.3	35 HRC	40	35000	0.03	0.018	0.01
	SAE 1.2316	Profile Milling	Ball Nose	0.3	35 HRC	70	35000	0.03	0.018	0.01
	SAE 1.2316	Profile Milling	Ball Nose	0.5	35 HRC	15	22000	0.05	0.03	0.012
	SAE 1.2316	Profile Milling	Ball Nose	0.5	35 HRC	20	25000	0.05	0.03	0.012
	SAE 1.2316	Profile Milling	Ball Nose	0.5	35 HRC	40	35000	0.05	0.03	0.012
	SAE 1.2316	Profile Milling	Ball Nose	0.5	35 HRC	70	45000	0.05	0.03	0.01
	SAE 1.2316	Profile Milling	Ball Nose	1	35 HRC	15	22000	0.1	0.06	0.012
	SAE 1.2316	Profile Milling	Ball Nose	1	35 HRC	20	25000	0.1	0.06	0.012
	SAE 1.2316	Profile Milling	Ball Nose	1	35 HRC	40	35000	0.1	0.06	0.012
	SAE 1.2316	Profile Milling	Ball Nose	1	35 HRC	70	45000	0.1	0.06	0.01
	SAE 1.2316	Profile Milling	Ball Nose	1.5	35 HRC	15	22000	0.15	0.09	0.012
	SAE 1.2316	Profile Milling	Ball Nose	1.5	35 HRC	20	25000	0.15	0.09	0.012
	SAE 1.2316	Profile Milling	Ball Nose	1.5	35 HRC	40	35000	0.15	0.09	0.012
	SAE 1.2316	Profile Milling	Ball Nose	1.5	35 HRC	70	45000	0.15	0.09	0.01
	SAE 1.2316	Profile Milling	Ball Nose	2	35 HRC	15	22000	0.2	0.12	0.012
	SAE 1.2316	Profile Milling	Ball Nose	2	35 HRC	20	25000	0.2	0.12	0.012
	SAE 1.2316	Profile Milling	Ball Nose	2	35 HRC	40	35000	0.2	0.12	0.012
	SAE 1.2316	Profile Milling	Ball Nose	2	35 HRC	70	45000	0.2	0.12	0.01
	SAE 1.2316	Profile Milling	Ball Nose	2.5	35 HRC	15	22000	0.25	0.15	0.012
	SAE 1.2316	Profile Milling	Ball Nose	2.5	35 HRC	20	25000	0.25	0.15	0.012
	SAE 1.2316	Profile Milling	Ball Nose	2.5	35 HRC	40	35000	0.25	0.15	0.012
	SAE 1.2316	Profile Milling	Ball Nose	2.5	35 HRC	70	45000	0.25	0.15	0.01
	SAE 1.2316	Profile Milling	Ball Nose	3	35 HRC	15	22000	0.3	0.18	0.012
	SAE 1.2316	Profile Milling	Ball Nose	3	35 HRC	20	25000	0.3	0.18	0.012
	SAE 1.2316	Profile Milling	Ball Nose	3	35 HRC	40	35000	0.3	0.18	0.012
	SAE 1.2316	Profile Milling	Ball Nose	3	35 HRC	70	45000	0.3	0.18	0.01
	SAE 1.2316	Profile Milling	Ball Nose	4	35 HRC	15	22000	0.1	0.1	0.006
	SAE 1.2316	Profile Milling	Ball Nose	4	35 HRC	20	25000	0.1	0.1	0.006
	SAE 1.2316	Profile Milling	Ball Nose	4	35 HRC	40	35000	0.1	0.1	0.006
	SAE 1.2316	Profile Milling	Ball Nose	4	35 HRC	70	45000	0.4	0.24	0.01
	SAE 1.2316	Profile Milling	Ball Nose	5	35 HRC	15	22000	0.1	0.1	0.006
	SAE 1.2316	Profile Milling	Ball Nose	5	35 HRC	20	25000	0.1	0.1	0.006
	SAE 1.2316	Profile Milling	Ball Nose	5	35 HRC	40	35000	0.1	0.1	0.006

	Material	Process	Type	Cutting Tool dia.	Hardness	Pressure	Speed (n)	Ae (mm)	Ap (mm)	Fz (mm)
H	SAE 1.2316	Profile Milling	Ball Nose	5	35 HRC	70	45000	0.5	0.3	0.01
	SAE 1.2316	Profile Milling	Ball Nose	6	35 HRC	15	22000	0.1	0.1	0.006
	SAE 1.2316	Profile Milling	Ball Nose	6	35 HRC	20	25000	0.1	0.1	0.006
	SAE 1.2316	Profile Milling	Ball Nose	6	35 HRC	40	35000	0.1	0.1	0.006
	SAE 1.2316	Profile Milling	Ball Nose	6	35 HRC	70	45000	0.6	0.36	0.01
	SAE 1.2316	Slot Milling	End-Mill	0.3	35 HRC	15	22000	1	0.1	0.006
	SAE 1.2316	Slot Milling	End-Mill	0.3	35 HRC	20	25000	1	0.1	0.006
	SAE 1.2316	Slot Milling	End-Mill	0.3	35 HRC	40	35000	1	0.15	0.006
	SAE 1.2316	Slot Milling	End-Mill	0.3	35 HRC	70	45000	1	0.15	0.006
	SAE 1.2316	Slot Milling	End-Mill	0.5	35 HRC	15	22000	1	0.1	0.007
	SAE 1.2316	Slot Milling	End-Mill	0.5	35 HRC	20	25000	1	0.1	0.007
	SAE 1.2316	Slot Milling	End-Mill	0.5	35 HRC	40	35000	1	0.15	0.007
	SAE 1.2316	Slot Milling	End-Mill	0.5	35 HRC	70	45000	1	0.15	0.006
	SAE 1.2316	Slot Milling	End-Mill	0.8	35 HRC	15	22000	2	0.12	0.01
	SAE 1.2316	Slot Milling	End-Mill	0.8	35 HRC	20	25000	2	0.14	0.01
	SAE 1.2316	Slot Milling	End-Mill	0.8	35 HRC	40	35000	2	0.14	0.01
	SAE 1.2316	Slot Milling	End-Mill	0.8	35 HRC	70	45000	1	0.15	0.006
	SAE 1.2316	Slot Milling	End-Mill	1	35 HRC	15	22000	3	0.12	0.01
	SAE 1.2316	Slot Milling	End-Mill	1	35 HRC	20	25000	3	0.12	0.01
	SAE 1.2316	Slot Milling	End-Mill	1	35 HRC	40	35000	3	0.15	0.01
	SAE 1.2316	Slot Milling	End-Mill	1	35 HRC	70	45000	1	0.15	0.006
	SAE 1.2316	Slot Milling	End-Mill	1.5	35 HRC	15	22000	0.5	0.5	0.014
	SAE 1.2316	Slot Milling	End-Mill	1.5	35 HRC	20	25000	0.5	0.5	0.017
	SAE 1.2316	Slot Milling	End-Mill	1.5	35 HRC	40	35000	0.5	0.5	0.018
	SAE 1.2316	Slot Milling	End-Mill	1.5	35 HRC	70	45000	1	0.15	0.006
	SAE 1.2316	Slot Milling	End-Mill	2	35 HRC	15	22000	4	0.08	0.009
	SAE 1.2316	Slot Milling	End-Mill	2	35 HRC	20	25000	4	0.08	0.009
	SAE 1.2316	Slot Milling	End-Mill	2	35 HRC	40	35000	4	0.09	0.009
	SAE 1.2316	Slot Milling	End-Mill	2	35 HRC	70	45000	1	0.15	0.006
	SAE 1.2316	Slot Milling	End-Mill	2.5	35 HRC	15	22000	1	0.1	0.01
	SAE 1.2316	Slot Milling	End-Mill	2.5	35 HRC	20	25000	1	0.1	0.013
	SAE 1.2316	Slot Milling	End-Mill	2.5	35 HRC	40	35000	1	0.15	0.013
	SAE 1.2316	Slot Milling	End-Mill	2.5	35 HRC	70	45000	1	0.15	0.006
	SAE 1.2316	Slot Milling	End-Mill	3	35 HRC	15	22000	2	0.12	0.01
	SAE 1.2316	Slot Milling	End-Mill	3	35 HRC	20	25000	2	0.14	0.01
	SAE 1.2316	Slot Milling	End-Mill	3	35 HRC	40	35000	2	0.14	0.01
	SAE 1.2316	Slot Milling	End-Mill	3	35 HRC	70	45000	1	0.15	0.006
	SAE 1.2316	Slot Milling	End-Mill	4	35 HRC	15	22000	3	0.12	0.01
	SAE 1.2316	Slot Milling	End-Mill	4	35 HRC	20	25000	3	0.12	0.01
	SAE 1.2316	Slot Milling	End-Mill	4	35 HRC	40	35000	3	0.15	0.01
	SAE 1.2316	Slot Milling	End-Mill	4	35 HRC	70	45000	1	0.15	0.006
	SAE 1.2316	Slot Milling	End-Mill	4.5	35 HRC	15	22000	3	0.12	0.01
	SAE 1.2316	Slot Milling	End-Mill	4.5	35 HRC	20	25000	3	0.12	0.01
	SAE 1.2316	Slot Milling	End-Mill	4.5	35 HRC	40	35000	3	0.15	0.01
	SAE 1.2316	Slot Milling	End-Mill	4.5	35 HRC	70	45000	1	0.15	0.006
	SAE 1.2316	Slot Milling	End-Mill	5	35 HRC	15	22000	0.5	0.5	0.012
	SAE 1.2316	Slot Milling	End-Mill	5	35 HRC	20	25000	0.5	0.5	0.017
	SAE 1.2316	Slot Milling	End-Mill	5	35 HRC	40	35000	0.5	0.5	0.018
	SAE 1.2316	Slot Milling	End-Mill	5	35 HRC	70	45000	1	0.15	0.006
	SAE 1.2316	Slot Milling	End-Mill	6	35 HRC	15	22000	4	0.08	0.009
	SAE 1.2316	Slot Milling	End-Mill	6	35 HRC	20	25000	4	0.08	0.009
	SAE 1.2316	Slot Milling	End-Mill	6	35 HRC	40	35000	4	0.09	0.009
	SAE 1.2316	Slot Milling	End-Mill	6	35 HRC	70	45000	1	0.15	0.006
	SAE 1.2316	Shoulder Mill	End-Mill	0.5	35 HRC	15	22000	0.18	0.3	0.009
	SAE 1.2316	Shoulder Mill	End-Mill	0.5	35 HRC	20	25000	0.2	0.3	0.009
	SAE 1.2316	Shoulder Mill	End-Mill	0.5	35 HRC	40	35000	0.2	0.35	0.01
	SAE 1.2316	Shoulder Mill	End-Mill	0.5	35 HRC	70	45000	0.2	0.35	0.01
	SAE 1.2316	Shoulder Mill	End-Mill	1	35 HRC	15	22000	0.5	0.5	0.015
	SAE 1.2316	Shoulder Mill	End-Mill	1	35 HRC	20	25000	0.5	0.5	0.017
	SAE 1.2316	Shoulder Mill	End-Mill	1	35 HRC	40	35000	0.5	0.5	0.018
	SAE 1.2316	Shoulder Mill	End-Mill	1	35 HRC	70	45000	0.2	0.35	0.01
	SAE 1.2316	Shoulder Mill	End-Mill	2	35 HRC	15	22000	4	0.08	0.009
	SAE 1.2316	Shoulder Mill	End-Mill	2	35 HRC	20	25000	4	0.08	0.009
	SAE 1.2316	Shoulder Mill	End-Mill	2	35 HRC	40	35000	4	0.09	0.009
	SAE 1.2316	Shoulder Mill	End-Mill	2	35 HRC	70	45000	0.2	0.35	0.01
	SAE 1.2316	Shoulder Mill	End-Mill	3	35 HRC	15	22000	0.5	0.5	0.015
	SAE 1.2316	Shoulder Mill	End-Mill	3	35 HRC	20	25000	0.5	0.5	0.017
	SAE 1.2316	Shoulder Mill	End-Mill	3	35 HRC	40	35000	0.5	0.5	0.018
	SAE 1.2316	Shoulder Mill	End-Mill	3	35 HRC	70	45000	0.2	0.35	0.01
	SAE 1.2316	Shoulder Mill	End-Mill	4	35 HRC	15	22000	2.2	0.08	0.009
	SAE 1.2316	Shoulder Mill	End-Mill	4	35 HRC	20	25000	2.2	0.08	0.009
	SAE 1.2316	Shoulder Mill	End-Mill	4	35 HRC	40	35000	2.2	0.09	0.009
	SAE 1.2316	Shoulder Mill	End-Mill	4	35 HRC	70	45000	0.2	0.35	0.01
	SAE 1.2316	Shoulder Mill	End-Mill	5	35 HRC	15	22000	3.2	0.08	0.009
	SAE 1.2316	Shoulder Mill	End-Mill	5	35 HRC	20	25000	3.2	0.08	0.009
	SAE 1.2316	Shoulder Mill	End-Mill	5	35 HRC	40	35000	3.2	0.09	0.009
	SAE 1.2316	Shoulder Mill	End-Mill	5	35 HRC	70	45000	0.2	0.35	0.01
	SAE 1.2316	Shoulder Mill	End-Mill	6	35 HRC	15	22000	3.8	0.1	0.015
	SAE 1.2316	Shoulder Mill	End-Mill	6	35 HRC	20	25000	3.8	0.1	0.017
	SAE 1.2316	Shoulder Mill	End-Mill	6	35 HRC	40	35000	3.8	0.1	0.018
	SAE 1.2316	Shoulder Mill	End-Mill	6	35 HRC	70	45000	0.2	0.35	0.01

	Material	Process	Type	Cutting Tool dia.	Hardness	Pressure	Speed (n)	Ae (mm)	Ap (mm)	Fz (mm)
M	SS 316	Drilling	Drill	0.5	220-240 HB	15	22000	1	0.1	0.002
	SS 316	Drilling	Drill	0.5	220-240 HB	20	25000	1	0.1	0.002
	SS 316	Drilling	Drill	0.5	220-240 HB	40	35000	1	0.1	0.002
	SS 316	Drilling	Drill	0.5	220-240 HB	70	45000	1	0.1	0.004
	SS 316	Drilling	Drill	0.8	220-240 HB	15	22000	2	0.1	0.004
	SS 316	Drilling	Drill	0.8	220-240 HB	20	25000	2	0.1	0.004
	SS 316	Drilling	Drill	0.8	220-240 HB	40	35000	2	0.1	0.004
	SS 316	Drilling	Drill	0.8	220-240 HB	70	45000	1	0.1	0.004
	SS 316	Drilling	Drill	1	220-240 HB	15	22000	1	0.1	0.004
	SS 316	Drilling	Drill	1	220-240 HB	20	25000	1	0.1	0.004
	SS 316	Drilling	Drill	1	220-240 HB	40	35000	1	0.1	0.004
	SS 316	Drilling	Drill	1	220-240 HB	70	45000	1	0.1	0.004
	SS 316	Drilling	Drill	1.5	220-240 HB	15	22000	2	0.1	0.006
	SS 316	Drilling	Drill	1.5	220-240 HB	20	25000	2	0.1	0.006
	SS 316	Drilling	Drill	1.5	220-240 HB	40	35000	2	0.1	0.01
	SS 316	Drilling	Drill	1.5	220-240 HB	70	45000	1	0.1	0.01
	SS 316	Drilling	Drill	2	220-240 HB	15	22000	1	0.1	0.01
	SS 316	Drilling	Drill	2	220-240 HB	20	25000	1	0.1	0.01
	SS 316	Drilling	Drill	2	220-240 HB	40	35000	1	0.1	0.01
	SS 316	Drilling	Drill	2	220-240 HB	70	45000	1	0.1	0.01
	SS 316	Drilling	Drill	2.5	220-240 HB	15	22000	2	0.1	0.01
	SS 316	Drilling	Drill	2.5	220-240 HB	20	25000	2	0.1	0.01
	SS 316	Drilling	Drill	2.5	220-240 HB	40	35000	2	0.1	0.01
	SS 316	Drilling	Drill	2.5	220-240 HB	70	45000	1	0.1	0.01
	SS 316	Drilling	Drill	3	220-240 HB	15	22000	1	0.1	0.01
	SS 316	Drilling	Drill	3	220-240 HB	20	25000	1	0.1	0.01
	SS 316	Drilling	Drill	3	220-240 HB	40	35000	1	0.1	0.01
	SS 316	Drilling	Drill	3	220-240 HB	70	45000	1	0.1	0.01
	SS 316	Drilling	Drill	3.5	220-240 HB	15	22000	2	0.1	0.01

	Material	Process	Type	Cutting Tool dia.	Hardness	Pressure	Speed (n)	Ae (mm)	Ap (mm)	Fz (mm)
M	SS 316	Drilling	Drill	3.5	220-240 HB	20	25000	2	0.1	0.01
	SS 316	Drilling	Drill	3.5	220-240 HB	40	35000	2	0.1	0.01
	SS 316	Drilling	Drill	3.5	220-240 HB	70	45000	1	0.1	0.01
	SS 316	Profile Milling	Ball Nose	0.5	220-240 HB	15	22000	0.1	0.1	0.006
	SS 316	Profile Milling	Ball Nose	0.5	220-240 HB	20	25000	0.1	0.1	0.006
	SS 316	Profile Milling	Ball Nose	0.5	220-240 HB	40	35000	0.1	0.1	0.006
	SS 316	Profile Milling	Ball Nose	0.5	220-240 HB	70	45000	0.1	0.1	0.006
	SS 316	Profile Milling	Ball Nose	1	220-240 HB	15	22000	0.1	0.1	0.006
	SS 316	Profile Milling	Ball Nose	1	220-240 HB	20	25000	0.1	0.1	0.006
	SS 316	Profile Milling	Ball Nose	1	220-240 HB	40	35000	0.1	0.1	0.006
	SS 316	Profile Milling	Ball Nose	1	220-240 HB	70	45000	0.1	0.1	0.006
	SS 316	Profile Milling	Ball Nose	1.5	220-240 HB	15	22000	0.1	0.1	0.006
	SS 316	Profile Milling	Ball Nose	1.5	220-240 HB	20	25000	0.1	0.1	0.006
	SS 316	Profile Milling	Ball Nose	1.5	220-240 HB	40	35000	0.1	0.1	0.006
	SS 316	Profile Milling	Ball Nose	1.5	220-240 HB	70	45000	0.1	0.1	0.006
	SS 316	Profile Milling	Ball Nose	2	220-240 HB	15	22000	0.1	0.1	0.006
	SS 316	Profile Milling	Ball Nose	2	220-240 HB	20	25000	0.1	0.1	0.006
	SS 316	Profile Milling	Ball Nose	2	220-240 HB	40	35000	0.1	0.1	0.006
	SS 316	Profile Milling	Ball Nose	2	220-240 HB	70	45000	0.1	0.1	0.006
	SS 316	Profile Milling	Ball Nose	2.5	220-240 HB	15	22000	0.1	0.1	0.006
	SS 316	Profile Milling	Ball Nose	2.5	220-240 HB	20	25000	0.1	0.1	0.006
	SS 316	Profile Milling	Ball Nose	2.5	220-240 HB	40	35000	0.1	0.1	0.006
	SS 316	Profile Milling	Ball Nose	2.5	220-240 HB	70	45000	0.1	0.1	0.006
	SS 316	Profile Milling	Ball Nose	3	220-240 HB	15	22000	0.1	0.1	0.006
	SS 316	Profile Milling	Ball Nose	3	220-240 HB	20	25000	0.1	0.1	0.006
	SS 316	Profile Milling	Ball Nose	3	220-240 HB	40	35000	0.1	0.1	0.006
	SS 316	Profile Milling	Ball Nose	3	220-240 HB	70	45000	0.1	0.1	0.006
	SS 316	Profile Milling	Ball Nose	4	220-240 HB	15	22000	0.1	0.1	0.006
	SS 316	Profile Milling	Ball Nose	4	220-240 HB	20	25000	0.1	0.1	0.006
	SS 316	Profile Milling	Ball Nose	4	220-240 HB	40	35000	0.1	0.1	0.006
	SS 316	Profile Milling	Ball Nose	4	220-240 HB	70	45000	0.1	0.1	0.006
	SS 316	Profile Milling	Ball Nose	5	220-240 HB	15	22000	0.1	0.1	0.006
	SS 316	Profile Milling	Ball Nose	5	220-240 HB	20	25000	0.1	0.1	0.006
	SS 316	Profile Milling	Ball Nose	5	220-240 HB	40	35000	0.1	0.1	0.006
	SS 316	Profile Milling	Ball Nose	5	220-240 HB	70	45000	0.1	0.1	0.006
	SS 316	Profile Milling	Ball Nose	6	220-240 HB	15	22000	0.1	0.1	0.006
	SS 316	Profile Milling	Ball Nose	6	220-240 HB	20	25000	0.1	0.1	0.006
	SS 316	Profile Milling	Ball Nose	6	220-240 HB	40	35000	0.1	0.1	0.006
	SS 316	Profile Milling	Ball Nose	6	220-240 HB	70	45000	0.1	0.1	0.006
	SS 316	Slot Milling	End-Mill	0.5	220-240 HB	15	22000	1	0.1	0.008
	SS 316	Slot Milling	End-Mill	0.5	220-240 HB	20	25000	1	0.1	0.008
	SS 316	Slot Milling	End-Mill	0.5	220-240 HB	40	35000	1	0.15	0.009
	SS 316	Slot Milling	End-Mill	0.5	220-240 HB	70	45000	1	0.15	0.009
	SS 316	Slot Milling	End-Mill	0.8	220-240 HB	15	22000	2	0.12	0.01
	SS 316	Slot Milling	End-Mill	0.8	220-240 HB	20	25000	2	0.14	0.01
	SS 316	Slot Milling	End-Mill	0.8	220-240 HB	40	35000	2	0.14	0.01
	SS 316	Slot Milling	End-Mill	0.8	220-240 HB	70	45000	1	0.15	0.009
	SS 316	Slot Milling	End-Mill	1	220-240 HB	15	22000	3	0.12	0.01
	SS 316	Slot Milling	End-Mill	1	220-240 HB	20	25000	3	0.12	0.01
	SS 316	Slot Milling	End-Mill	1	220-240 HB	40	35000	3	0.15	0.01
	SS 316	Slot Milling	End-Mill	1	220-240 HB	70	45000	1	0.15	0.009
	SS 316	Slot Milling	End-Mill	1.5	220-240 HB	15	22000	0.5	0.5	0.012
	SS 316	Slot Milling	End-Mill	1.5	220-240 HB	20	25000	0.5	0.5	0.017
	SS 316	Slot Milling	End-Mill	1.5	220-240 HB	40	35000	0.5	0.5	0.018
	SS 316	Slot Milling	End-Mill	1.5	220-240 HB	70	45000	1	0.15	0.009
	SS 316	Slot Milling	End-Mill	2	220-240 HB	15	22000	4	0.08	0.009
	SS 316	Slot Milling	End-Mill	2	220-240 HB	20	25000	4	0.08	0.009
	SS 316	Slot Milling	End-Mill	2	220-240 HB	40	35000	4	0.09	0.009
	SS 316	Slot Milling	End-Mill	2	220-240 HB	70	45000	1	0.15	0.009
	SS 316	Slot Milling	End-Mill	2.5	220-240 HB	15	22000	1	0.1	0.015
	SS 316	Slot Milling	End-Mill	2.5	220-240 HB	20	25000	1	0.1	0.015
	SS 316	Slot Milling	End-Mill	2.5	220-240 HB	40	35000	1	0.15	0.016
	SS 316	Slot Milling	End-Mill	2.5	220-240 HB	70	45000	1	0.15	0.009
	SS 316	Slot Milling	End-Mill	3	220-240 HB	15	22000	2	0.12	0.01
	SS 316	Slot Milling	End-Mill	3	220-240 HB	20	25000	2	0.14	0.01
	SS 316	Slot Milling	End-Mill	3	220-240 HB	40	35000	2	0.14	0.01
	SS 316	Slot Milling	End-Mill	3	220-240 HB	70	45000	1	0.15	0.009
	SS 316	Slot Milling	End-Mill	4	220-240 HB	15	22000	3	0.12	0.01
	SS 316	Slot Milling	End-Mill	4	220-240 HB	20	25000	3	0.12	0.01
	SS 316	Slot Milling	End-Mill	4	220-240 HB	40	35000	3	0.15	0.01
	SS 316	Slot Milling	End-Mill	4	220-240 HB	70	45000	1	0.15	0.009
	SS 316	Slot Milling	End-Mill	4.5	220-240 HB	15	22000	3	0.12	0.01
	SS 316	Slot Milling	End-Mill	4.5	220-240 HB	20	25000	3	0.12	0.01
	SS 316	Slot Milling	End-Mill	4.5	220-240 HB	40	35000	3	0.15	0.01
	SS 316	Slot Milling	End-Mill	4.5	220-240 HB	70	45000	1	0.15	0.009
	SS 316	Slot Milling	End-Mill	5	220-240 HB	15	22000	0.5	0.5	0.015
	SS 316	Slot Milling	End-Mill	5	220-240 HB	20	25000	0.5	0.5	0.017
	SS 316	Slot Milling	End-Mill	5	220-240 HB	40	35000	0.5	0.5	0.018
	SS 316	Slot Milling	End-Mill	5	220-240 HB	70	45000	1	0.15	0.009
	SS 316	Slot Milling	End-Mill	6	220-240 HB	15	22000	4	0.08	0.009
	SS 316	Slot Milling	End-Mill	6	220-240 HB	20	25000	4	0.08	0.009
	SS 316	Slot Milling	End-Mill	6	220-240 HB	40	35000	4	0.09	0.009
	SS 316	Slot Milling	End-Mill	6	220-240 HB	70	45000	1	0.15	0.009
	SS 316	Shoulder Mill	End-Mill	1	220-240 HB	15	22000	0.5	0.5	0.014
	SS 316	Shoulder Mill	End-Mill	1	220-240 HB	20	25000	0.5	0.5	0.017
	SS 316	Shoulder Mill	End-Mill	1	220-240 HB	40	35000	0.5	0.5	0.018
	SS 316	Shoulder Mill	End-Mill	1	220-240 HB	70	45000	0.5	0.5	0.018
	SS 316	Shoulder Mill	End-Mill	2	220-240 HB	15	22000	4	0.08	0.009
	SS 316	Shoulder Mill	End-Mill	2	220-240 HB	20	25000	4	0.08	0.009
	SS 316	Shoulder Mill	End-Mill	2	220-240 HB	40	35000	4	0.09	0.009
	SS 316	Shoulder Mill	End-Mill	2	220-240 HB	70	45000	0.5	0.5	0.018
	SS 316	Shoulder Mill	End-Mill	3	220-240 HB	15	22000	0.5	0.5	0.01
	SS 316	Shoulder Mill	End-Mill	3	220-240 HB	20	25000	0.5	0.5	0.017
	SS 316	Shoulder Mill	End-Mill	3	220-240 HB	40	35000	0.5	0.5	0.018
	SS 316	Shoulder Mill	End-Mill	3	220-240 HB	70	45000	0.5	0.5	0.018
	SS 316	Shoulder Mill	End-Mill	4	220-240 HB	15	22000	4	0.08	0.009
	SS 316	Shoulder Mill	End-Mill	4	220-240 HB	20	25000	4	0.08	0.009
	SS 316	Shoulder Mill	End-Mill	4	220-240 HB	40	35000	4	0.09	0.009
	SS 316	Shoulder Mill	End-Mill	4	220-240 HB	70	45000	0.5	0.5	0.018
	SS 316	Shoulder Mill	End-Mill	5	220-240 HB	15	22000	4	0.08	0.009
	SS 316	Shoulder Mill	End-Mill	5	220-240 HB	20	25000	4	0.08	0.009
	SS 316	Shoulder Mill	End-Mill	5	220-240 HB	40	35000	4	0.09	0.009
	SS 316	Shoulder Mill	End-Mill	5	220-240 HB	70	45000	0.5	0.5	0.018
	SS 316	Shoulder Mill	End-Mill	6	220-240 HB	15	22000	0.5	0.5	0.013
	SS 316	Shoulder Mill	End-Mill	6	220-240 HB	20	25000	0.5	0.5	0.017
	SS 316	Shoulder Mill	End-Mill	6	220-240 HB	40	35000	0.5	0.5	0.018
	SS 316	Shoulder Mill	End-Mill	6	220-240 HB	70	45000	0.5	0.5	0.018

GJET Operating Data

	Material	Process	Type	Cutting Tool dia.	Hardness	Pressure	Speed (n)	Ae (mm)	Ap (mm)	Fz (mm)
N	Al-Si 9%	Drilling	Drill	0.3	100-120 HB	20	33000	0.3	0.025	0.002
	Al-Si 9%	Drilling	Drill	0.3	100-120 HB	30	44000	0.3	0.027	0.002
	Al-Si 9%	Drilling	Drill	0.3	100-120 HB	40	55000	0.3	0.027	0.002
	Al-Si 9%	Drilling	Drill	0.5	100-120 HB	20	33000	0.5	0.05	0.002
	Al-Si 9%	Drilling	Drill	0.5	100-120 HB	30	44000	0.5	0.05	0.002
	Al-Si 9%	Drilling	Drill	0.5	100-120 HB	40	55000	0.5	0.1	0.002
	Al-Si 9%	Drilling	Drill	0.8	100-120 HB	20	33000	0.8	0.1	0.002
	Al-Si 9%	Drilling	Drill	0.8	100-120 HB	30	44000	0.8	0.15	0.002
	Al-Si 9%	Drilling	Drill	0.8	100-120 HB	40	55000	0.8	0.15	0.002
	Al-Si 9%	Drilling	Drill	1	100-120 HB	20	33000	1	0.3	0.003
	Al-Si 9%	Drilling	Drill	1	100-120 HB	30	44000	1	0.3	0.003
	Al-Si 9%	Drilling	Drill	1	100-120 HB	40	55000	1	0.3	0.003
	Al-Si 9%	Drilling	Drill	1.5	100-120 HB	20	33000	1.5	0.15	0.004
	Al-Si 9%	Drilling	Drill	1.5	100-120 HB	30	44000	1.5	0.2	0.004
	Al-Si 9%	Drilling	Drill	1.5	100-120 HB	40	55000	1.5	0.25	0.004
	Al-Si 9%	Drilling	Drill	2	100-120 HB	20	33000	2	0.2	0.004
	Al-Si 9%	Drilling	Drill	2	100-120 HB	30	44000	2	0.25	0.004
	Al-Si 9%	Drilling	Drill	2	100-120 HB	40	55000	2	0.3	0.004
	Al-Si 9%	Drilling	Drill	3	100-120 HB	20	33000	3	0.25	0.004
	Al-Si 9%	Drilling	Drill	3	100-120 HB	30	44000	3	0.3	0.004
	Al-Si 9%	Drilling	Drill	3	100-120 HB	40	55000	3	0.35	0.004
	Al-Si 9%	Drilling	Drill	4	100-120 HB	20	33000	4	0.2	0.005
	Al-Si 9%	Drilling	Drill	4	100-120 HB	30	44000	4	0.25	0.005
	Al-Si 9%	Drilling	Drill	4	100-120 HB	40	55000	4	0.25	0.005
	Al-Si 9%	Drilling	Drill	5	100-120 HB	20	33000	5	0.2	0.005
	Al-Si 9%	Drilling	Drill	5	100-120 HB	30	44000	5	0.2	0.005
	Al-Si 9%	Drilling	Drill	5	100-120 HB	40	55000	5	0.2	0.005
	Al-Si 9%	Drilling	Drill	6	100-120 HB	20	33000	6	0.3	0.005
	Al-Si 9%	Drilling	Drill	6	100-120 HB	30	44000	6	0.3	0.006
	Al-Si 9%	Drilling	Drill	6	100-120 HB	40	55000	6	0.3	0.006
	Al-Si 9%	Profile Milling	Ball Nose	0.5	100-120 HB	20	33000	0.06	0.05	0.008
	Al-Si 9%	Profile Milling	Ball Nose	0.5	100-120 HB	30	44000	0.06	0.05	0.01
	Al-Si 9%	Profile Milling	Ball Nose	0.5	100-120 HB	40	55000	0.07	0.13	0.012
	Al-Si 9%	Profile Milling	Ball Nose	0.8	100-120 HB	20	33000	0.06	0.05	0.008
	Al-Si 9%	Profile Milling	Ball Nose	0.8	100-120 HB	30	44000	0.06	0.05	0.01
	Al-Si 9%	Profile Milling	Ball Nose	0.8	100-120 HB	40	55000	0.07	0.13	0.012
	Al-Si 9%	Profile Milling	Ball Nose	1	100-120 HB	20	33000	0.1	0.075	0.004
	Al-Si 9%	Profile Milling	Ball Nose	1	100-120 HB	30	44000	0.1	0.075	0.004
	Al-Si 9%	Profile Milling	Ball Nose	1	100-120 HB	40	55000	0.11	0.15	0.004
	Al-Si 9%	Profile Milling	Ball Nose	1.5	100-120 HB	20	33000	0.12	0.08	0.006
	Al-Si 9%	Profile Milling	Ball Nose	1.5	100-120 HB	30	44000	0.13	0.09	0.006
	Al-Si 9%	Profile Milling	Ball Nose	1.5	100-120 HB	40	55000	0.15	0.15	0.006
	Al-Si 9%	Profile Milling	Ball Nose	2	100-120 HB	20	33000	0.15	0.05	0.003
	Al-Si 9%	Profile Milling	Ball Nose	2	100-120 HB	30	44000	0.16	0.05	0.003
	Al-Si 9%	Profile Milling	Ball Nose	2	100-120 HB	40	55000	0.2	0.13	0.003
	Al-Si 9%	Profile Milling	Ball Nose	2.5	100-120 HB	20	33000	0.15	0.05	0.003
	Al-Si 9%	Profile Milling	Ball Nose	2.5	100-120 HB	30	44000	0.16	0.05	0.003
	Al-Si 9%	Profile Milling	Ball Nose	2.5	100-120 HB	40	55000	0.25	0.13	0.003
	Al-Si 9%	Profile Milling	Ball Nose	3	100-120 HB	20	33000	0.22	0.075	0.004
	Al-Si 9%	Profile Milling	Ball Nose	3	100-120 HB	30	44000	0.25	0.075	0.004
	Al-Si 9%	Profile Milling	Ball Nose	3	100-120 HB	40	55000	0.25	0.15	0.004
	Al-Si 9%	Profile Milling	Ball Nose	4	100-120 HB	20	33000	0.2	0.08	0.006
	Al-Si 9%	Profile Milling	Ball Nose	4	100-120 HB	30	44000	0.25	0.09	0.006
	Al-Si 9%	Profile Milling	Ball Nose	4	100-120 HB	40	55000	0.27	0.15	0.006
	Al-Si 9%	Profile Milling	Ball Nose	5	100-120 HB	20	33000	0.25	0.075	0.004
	Al-Si 9%	Profile Milling	Ball Nose	5	100-120 HB	30	44000	0.26	0.075	0.004
	Al-Si 9%	Profile Milling	Ball Nose	5	100-120 HB	40	55000	0.28	0.15	0.004
	Al-Si 9%	Profile Milling	Ball Nose	6	100-120 HB	20	33000	0.23	0.08	0.006
	Al-Si 9%	Profile Milling	Ball Nose	6	100-120 HB	30	44000	0.25	0.09	0.006
	Al-Si 9%	Profile Milling	Ball Nose	6	100-120 HB	40	55000	0.25	0.15	0.006
	Al-Si 9%	Slot Milling	End-Mill	0.5	100-120 HB	20	33000	0.5	0.05	0.007
	Al-Si 9%	Slot Milling	End-Mill	0.5	100-120 HB	30	44000	0.5	0.05	0.007
	Al-Si 9%	Slot Milling	End-Mill	0.5	100-120 HB	40	55000	0.5	0.05	0.007
	Al-Si 9%	Slot Milling	End-Mill	0.8	100-120 HB	20	33000	0.8	0.08	0.008
	Al-Si 9%	Slot Milling	End-Mill	0.8	100-120 HB	30	44000	0.8	0.08	0.008
	Al-Si 9%	Slot Milling	End-Mill	0.8	100-120 HB	40	55000	0.8	0.08	0.008
	Al-Si 9%	Slot Milling	End-Mill	1	100-120 HB	20	33000	1	0.1	0.02
	Al-Si 9%	Slot Milling	End-Mill	1	100-120 HB	30	44000	1	0.1	0.02
	Al-Si 9%	Slot Milling	End-Mill	1	100-120 HB	40	55000	1	0.1	0.02
	Al-Si 9%	Slot Milling	End-Mill	1.5	100-120 HB	20	33000	1.5	0.15	0.02
	Al-Si 9%	Slot Milling	End-Mill	1.5	100-120 HB	30	44000	1.5	0.15	0.02
	Al-Si 9%	Slot Milling	End-Mill	1.5	100-120 HB	40	55000	1.5	0.15	0.02
	Al-Si 9%	Slot Milling	End-Mill	2	100-120 HB	20	33000	2	0.2	0.022
	Al-Si 9%	Slot Milling	End-Mill	2	100-120 HB	30	44000	2	0.2	0.022
	Al-Si 9%	Slot Milling	End-Mill	2	100-120 HB	40	55000	2	0.2	0.022
	Al-Si 9%	Slot Milling	End-Mill	2.5	100-120 HB	20	33000	2.5	0.25	0.025
	Al-Si 9%	Slot Milling	End-Mill	2.5	100-120 HB	30	44000	2.5	0.25	0.025
	Al-Si 9%	Slot Milling	End-Mill	2.5	100-120 HB	40	55000	2.5	0.25	0.025
	Al-Si 9%	Slot Milling	End-Mill	3	100-120 HB	20	33000	3	0.3	0.025
	Al-Si 9%	Slot Milling	End-Mill	3	100-120 HB	30	44000	3	0.3	0.025
	Al-Si 9%	Slot Milling	End-Mill	3	100-120 HB	40	55000	3	0.3	0.025
	Al-Si 9%	Slot Milling	End-Mill	3.5	100-120 HB	20	33000	3.5	0.25	0.025
	Al-Si 9%	Slot Milling	End-Mill	3.5	100-120 HB	30	44000	3.5	0.25	0.025
	Al-Si 9%	Slot Milling	End-Mill	3.5	100-120 HB	40	55000	3.5	0.25	0.025
	Al-Si 9%	Slot Milling	End-Mill	4	100-120 HB	20	33000	4	0.28	0.025
	Al-Si 9%	Slot Milling	End-Mill	4	100-120 HB	30	44000	4	0.28	0.025
	Al-Si 9%	Slot Milling	End-Mill	4	100-120 HB	40	55000	4	0.28	0.025
	Al-Si 9%	Slot Milling	End-Mill	4.5	100-120 HB	20	33000	4.5	0.32	0.025
	Al-Si 9%	Slot Milling	End-Mill	4.5	100-120 HB	30	44000	4.5	0.32	0.025
	Al-Si 9%	Slot Milling	End-Mill	4.5	100-120 HB	40	55000	4.5	0.32	0.025
	Al-Si 9%	Slot Milling	End-Mill	5	100-120 HB	20	33000	5	0.35	0.022
	Al-Si 9%	Slot Milling	End-Mill	5	100-120 HB	30	44000	5	0.35	0.022
	Al-Si 9%	Slot Milling	End-Mill	5	100-120 HB	40	55000	5	0.35	0.022
	Al-Si 9%	Slot Milling	End-Mill	5.5	100-120 HB	20	33000	5.5	0.39	0.022
	Al-Si 9%	Slot Milling	End-Mill	5.5	100-120 HB	30	44000	5.5	0.39	0.022
	Al-Si 9%	Slot Milling	End-Mill	5	100-120 HB	40	55000	5.5	0.39	0.022
	Al-Si 9%	Slot Milling	End-Mill	6	100-120 HB	20	33000	6	0.36	0.022
	Al-Si 9%	Slot Milling	End-Mill	6	100-120 HB	30	44000	6	0.36	0.022
	Al-Si 9%	Slot Milling	End-Mill	6	100-120 HB	40	55000	6	0.36	0.022
	Al-Si 9%	Shoulder Mill	End-Mill	1	100-120 HB	20	33000	0.3	0.1	0.015
	Al-Si 9%	Shoulder Mill	End-Mill	1	100-120 HB	30	44000	0.3	0.15	0.017
	Al-Si 9%	Shoulder Mill	End-Mill	1	100-120 HB	40	55000	0.3	0.15	0.017
	Al-Si 9%	Shoulder Mill	End-Mill	2	100-120 HB	20	33000	0.6	0.1	0.015
	Al-Si 9%	Shoulder Mill	End-Mill	2	100-120 HB	30	44000	0.6	0.1	0.015
	Al-Si 9%	Shoulder Mill	End-Mill	2	100-120 HB	40	55000	0.6	0.1	0.018
	Al-Si 9%	Shoulder Mill	End-Mill	3	100-120 HB	20	33000	0.9	0.1	0.02
	Al-Si 9%	Shoulder Mill	End-Mill	3	100-120 HB	30	44000	0.9	0.15	0.02
	Al-Si 9%	Shoulder Mill	End-Mill	3	100-120 HB	40	55000	0.9	0.25	0.025
	Al-Si 9%	Shoulder Mill	End-Mill	4	100-120 HB	20	33000	1.2	0.1	0.015
	Al-Si 9%	Shoulder Mill	End-Mill	4	100-120 HB	30	44000	1.2	0.1	0.015
	Al-Si 9%	Shoulder Mill	End-Mill	4	100-120 HB	40	55000	1.2	0.1	0.015
	Al-Si 9%	Shoulder Mill	End-Mill	5	100-120 HB	20	33000	1.5	0.1	0.02
	Al-Si 9%	Shoulder Mill	End-Mill	5	100-120 HB	30	44000	1.5	0.13	0.02
	Al-Si 9%	Shoulder Mill	End-Mill	5	100-120 HB	40	55000	1.5	0.15	0.025
	Al-Si 9%	Shoulder Mill	End-Mill	6	100-120 HB	20	33000	1.8	0.1	0.02
	Al-Si 9%	Shoulder Mill	End-Mill	6	100-120 HB	30	44000	1.8	0.1	0.02
	Al-Si 9%	Shoulder Mill	End-Mill	6	100-120 HB	40	55000	1.8	0.1	0.02

	Material	Process	Type	Cutting Tool dia.	Hardness	Pressure	Speed (n)	Ae (mm)	Ap (mm)	Fz (mm)
H	SAE 1.2316	Drilling	Drill	0.3	35 HRC	20	33000	0.3	0.07	0.002
	SAE 1.2316	Drilling	Drill	0.3	35 HRC	30	44000	0.3	0.07	0.002
	SAE 1.2316	Drilling	Drill	0.3	35 HRC	40	55000	0.3	0.07	0.002
	SAE 1.2316	Drilling	Drill	0.5	35 HRC	20	33000	0.5	0.1	0.002
	SAE 1.2316	Drilling	Drill	0.5	35 HRC	30	44000	0.5	0.1	0.002
	SAE 1.2316	Drilling	Drill	0.5	35 HRC	40	55000	0.5	0.1	0.002
	SAE 1.2316	Drilling	Drill	0.8	35 HRC	20	33000	0.8	0.1	0.002
	SAE 1.2316	Drilling	Drill	0.8	35 HRC	30	44000	0.8	0.1	0.002
	SAE 1.2316	Drilling	Drill	0.8	35 HRC	40	55000	0.8	0.1	0.002
	SAE 1.2316	Drilling	Drill	1	35 HRC	20	33000	1	0.1	0.003
	SAE 1.2316	Drilling	Drill	1	35 HRC	30	44000	1	0.1	0.003
	SAE 1.2316	Drilling	Drill	1	35 HRC	40	55000	1	0.1	0.003
	SAE 1.2316	Drilling	Drill	1.5	35 HRC	20	33000	1.5	0.1	0.004
	SAE 1.2316	Drilling	Drill	1.5	35 HRC	30	44000	1.5	0.1	0.004
	SAE 1.2316	Drilling	Drill	1.5	35 HRC	40	55000	1.5	0.1	0.004
	SAE 1.2316	Drilling	Drill	2	35 HRC	20	33000	2	0.1	0.004
	SAE 1.2316	Drilling	Drill	2	35 HRC	30	44000	2	0.1	0.004
	SAE 1.2316	Drilling	Drill	2	35 HRC	40	55000	2	0.1	0.004
	SAE 1.2316	Drilling	Drill	2.5	35 HRC	20	33000	2.5	0.1	0.004
	SAE 1.2316	Drilling	Drill	2.5	35 HRC	30	44000	2.5	0.1	0.004
	SAE 1.2316	Drilling	Drill	2.5	35 HRC	40	55000	2.5	0.1	0.004
	SAE 1.2316	Drilling	Drill	3	35 HRC	20	33000	3	0.1	0.005
	SAE 1.2316	Drilling	Drill	3	35 HRC	30	44000	3	0.1	0.005
	SAE 1.2316	Drilling	Drill	3	35 HRC	40	55000	3	0.1	0.005
	SAE 1.2316	Drilling	Drill	3.5	35 HRC	20	33000	3.5	0.1	0.005
	SAE 1.2316	Drilling	Drill	3.5	35 HRC	30	44000	3.5	0.1	0.005
	SAE 1.2316	Drilling	Drill	3.5	35 HRC	40	55000	3.5	0.1	0.005
	SAE 1.2316	Profile Milling	Ball Nose	0.3	35 HRC	20	33000	0.03	0.018	0.01
	SAE 1.2316	Profile Milling	Ball Nose	0.3	35 HRC	30	44000	0.03	0.018	0.01
	SAE 1.2316	Profile Milling	Ball Nose	0.3	35 HRC	40	55000	0.03	0.018	0.01
	SAE 1.2316	Profile Milling	Ball Nose	0.5	35 HRC	20	33000	0.05	0.03	0.012
	SAE 1.2316	Profile Milling	Ball Nose	0.5	35 HRC	30	44000	0.05	0.03	0.012
	SAE 1.2316	Profile Milling	Ball Nose	0.5	35 HRC	40	55000	0.05	0.03	0.012
	SAE 1.2316	Profile Milling	Ball Nose	1	35 HRC	20	33000	0.1	0.06	0.012
	SAE 1.2316	Profile Milling	Ball Nose	1	35 HRC	30	44000	0.1	0.06	0.012
	SAE 1.2316	Profile Milling	Ball Nose	1	35 HRC	40	55000	0.1	0.06	0.012
	SAE 1.2316	Profile Milling	Ball Nose	1.5	35 HRC	20	33000	0.15	0.09	0.012
	SAE 1.2316	Profile Milling	Ball Nose	1.5	35 HRC	30	44000	0.15	0.09	0.012
	SAE 1.2316	Profile Milling	Ball Nose	1.5	35 HRC	40	55000	0.15	0.09	0.012
	SAE 1.2316	Profile Milling	Ball Nose	2	35 HRC	20	33000	0.2	0.12	0.012
	SAE 1.2316	Profile Milling	Ball Nose	2	35 HRC	30	44000	0.2	0.12	0.012
	SAE 1.2316	Profile Milling	Ball Nose	2	35 HRC	40	55000	0.2	0.12	0.012
	SAE 1.2316	Profile Milling	Ball Nose	2.5	35 HRC	20	33000	0.25	0.15	0.012
	SAE 1.2316	Profile Milling	Ball Nose	2.5	35 HRC	30	44000	0.25	0.15	0.012
	SAE 1.2316	Profile Milling	Ball Nose	2.5	35 HRC	40	55000	0.25	0.15	0.012
	SAE 1.2316	Profile Milling	Ball Nose	3	35 HRC	20	33000	0.3	0.18	0.012
	SAE 1.2316	Profile Milling	Ball Nose	3	35 HRC	30	44000	0.3	0.18	0.012
	SAE 1.2316	Profile Milling	Ball Nose	3	35 HRC	40	55000	0.3	0.18	0.012
	SAE 1.2316	Profile Milling	Ball Nose	4	35 HRC	20	33000	0.1	0.1	0.006
	SAE 1.2316	Profile Milling	Ball Nose	4	35 HRC	30	44000	0.1	0.1	0.006
	SAE 1.2316	Profile Milling	Ball Nose	4	35 HRC	40	55000	0.1	0.1	0.006
	SAE 1.2316	Profile Milling	Ball Nose	5	35 HRC	20	33000	0.1	0.1	0.006
	SAE 1.2316	Profile Milling	Ball Nose	5	35 HRC	30	44000	0.1	0.1	0.006
	SAE 1.2316	Profile Milling	Ball Nose	5	35 HRC	40	55000	0.1	0.1	0.006
	SAE 1.2316	Profile Milling	Ball Nose	6	35 HRC	20	33000	0.1	0.1	0.006
	SAE 1.2316	Profile Milling	Ball Nose	6	35 HRC	30	44000	0.1	0.1	0.006
	SAE 1.2316	Profile Milling	Ball Nose	6	35 HRC	40	55000	0.1	0.1	0.006
	SAE 1.2316	Slot Milling	End-Mill	0.3	35 HRC	20	33000	1	0.1	0.006
	SAE 1.2316	Slot Milling	End-Mill	0.3	35 HRC	30	44000	1	0.1	0.006
	SAE 1.2316	Slot Milling	End-Mill	0.3	35 HRC	40	55000	1	0.15	0.006
	SAE 1.2316	Slot Milling	End-Mill	0.5	35 HRC	20	33000	1	0.1	0.007
	SAE 1.2316	Slot Milling	End-Mill	0.5	35 HRC	30	44000	1	0.1	0.007
	SAE 1.2316	Slot Milling	End-Mill	0.5	35 HRC	40	55000	1	0.15	0.007
	SAE 1.2316	Slot Milling	End-Mill	0.8	35 HRC	20	33000	2	0.12	0.01
	SAE 1.2316	Slot Milling	End-Mill	0.8	35 HRC	30	44000	2	0.14	0.01
	SAE 1.2316	Slot Milling	End-Mill	0.8	35 HRC	40	55000	2	0.14	0.01
	SAE 1.2316	Slot Milling	End-Mill	1	35 HRC	20	33000	3	0.12	0.01
	SAE 1.2316	Slot Milling	End-Mill	1	35 HRC	30	44000	3	0.12	0.01
	SAE 1.2316	Slot Milling	End-Mill	1	35 HRC	40	55000	3	0.15	0.01
	SAE 1.2316	Slot Milling	End-Mill	1.5	35 HRC	20	33000	0.5	0.5	0.014
	SAE 1.2316	Slot Milling	End-Mill	1.5	35 HRC	30	44000	0.5	0.5	0.017
	SAE 1.2316	Slot Milling	End-Mill	1.5	35 HRC	40	55000	0.5	0.5	0.018
	SAE 1.2316	Slot Milling	End-Mill	2	35 HRC	20	33000	4	0.08	0.009
	SAE 1.2316	Slot Milling	End-Mill	2	35 HRC	30	44000	4	0.08	0.009
	SAE 1.2316	Slot Milling	End-Mill	2	35 HRC	40	55000	4	0.09	0.009
	SAE 1.2316	Slot Milling	End-Mill	2.5	35 HRC	20	33000	1	0.1	0.01
	SAE 1.2316	Slot Milling	End-Mill	2.5	35 HRC	30	44000	1	0.1	0.013
	SAE 1.2316	Slot Milling	End-Mill	2.5	35 HRC	40	55000	1	0.15	0.013
	SAE 1.2316	Slot Milling	End-Mill	3	35 HRC	20	33000	2	0.12	0.01
	SAE 1.2316	Slot Milling	End-Mill	3	35 HRC	30	44000	2	0.14	0.01
	SAE 1.2316	Slot Milling	End-Mill	3	35 HRC	40	55000	2	0.14	0.01
	SAE 1.2316	Slot Milling	End-Mill	4	35 HRC	20	33000	3	0.12	0.01
	SAE 1.2316	Slot Milling	End-Mill	4	35 HRC	30	44000	3	0.12	0.01
	SAE 1.2316	Slot Milling	End-Mill	4	35 HRC	40	55000	3	0.15	0.01
	SAE 1.2316	Slot Milling	End-Mill	4.5	35 HRC	20	33000	3	0.12	0.01
	SAE 1.2316	Slot Milling	End-Mill	4.5	35 HRC	30	44000	3	0.12	0.01
	SAE 1.2316	Slot Milling	End-Mill	4.5	35 HRC	40	55000	3	0.15	0.01
	SAE 1.2316	Slot Milling	End-Mill	5	35 HRC	20	33000	0.5	0.5	0.012
	SAE 1.2316	Slot Milling	End-Mill	5	35 HRC	30	44000	0.5	0.5	0.017
	SAE 1.2316	Slot Milling	End-Mill	5	35 HRC	40	55000	0.5	0.5	0.018
	SAE 1.2316	Slot Milling	End-Mill	6	35 HRC	20	33000	4	0.08	0.009
	SAE 1.2316	Slot Milling	End-Mill	6	35 HRC	30	44000	4	0.08	0.009
	SAE 1.2316	Slot Milling	End-Mill	6	35 HRC	40	55000	4	0.09	0.009
	SAE 1.2316	Shoulder Mill	End-Mill	0.5	35 HRC	20	33000	0.18	0.3	0.009
	SAE 1.2316	Shoulder Mill	End-Mill	0.5	35 HRC	30	44000	0.2	0.3	0.009
	SAE 1.2316	Shoulder Mill	End-Mill	0.5	35 HRC	40	55000	0.2	0.35	0.01
	SAE 1.2316	Shoulder Mill	End-Mill	1	35 HRC	20	33000	0.5	0.5	0.015
	SAE 1.2316	Shoulder Mill	End-Mill	1	35 HRC	30	44000	0.5	0.5	0.017
	SAE 1.2316	Shoulder Mill	End-Mill	1	35 HRC	40	55000	0.5	0.5	0.018
	SAE 1.2316	Shoulder Mill	End-Mill	2	35 HRC	20	33000	4	0.08	0.009
	SAE 1.2316	Shoulder Mill	End-Mill	2	35 HRC	30	44000	4	0.08	0.009
	SAE 1.2316	Shoulder Mill	End-Mill	2	35 HRC	40	55000	4	0.09	0.009
	SAE 1.2316	Shoulder Mill	End-Mill	3	35 HRC	20	33000	0.5	0.5	0.015
	SAE 1.2316	Shoulder Mill	End-Mill	3	35 HRC	30	44000	0.5	0.5	0.017
	SAE 1.2316	Shoulder Mill	End-Mill	3	35 HRC	40	55000	0.5	0.5	0.018
	SAE 1.2316	Shoulder Mill	End-Mill	4	35 HRC	20	33000	2.2	0.08	0.009
	SAE 1.2316	Shoulder Mill	End-Mill	4	35 HRC	30	44000	2.2	0.08	0.009
	SAE 1.2316	Shoulder Mill	End-Mill	4	35 HRC	40	55000	2.2	0.09	0.009
	SAE 1.2316	Shoulder Mill	End-Mill	5	35 HRC	20	33000	3.2	0.08	0.009
	SAE 1.2316	Shoulder Mill	End-Mill	5	35 HRC	30	44000	3.2	0.08	0.009
	SAE 1.2316	Shoulder Mill	End-Mill	5	35 HRC	40	55000	3.2	0.09	0.009
	SAE 1.2316	Shoulder Mill	End-Mill	6	35 HRC	20	33000	3.8	0.1	0.015
	SAE 1.2316	Shoulder Mill	End-Mill	6	35 HRC	30	44000	3.8	0.1	0.017
	SAE 1.2316	Shoulder Mill	End-Mill	6	35 HRC	40	55000	3.8	0.1	0.018

	Material	Process	Type	Cutting Tool dia.	Hardness	Pressure	Speed (n)	Ae (mm)	Ap (mm)	Fz (mm)
M	SS 316	Drilling	Drill	0.5	220-240 HB	20	33000	1	0.1	0.002
	SS 316	Drilling	Drill	0.5	220-240 HB	30	44000	1	0.1	0.002
	SS 316	Drilling	Drill	0.5	220-240 HB	40	55000	1	0.1	0.002
	SS 316	Drilling	Drill	0.8	220-240 HB	20	33000	2	0.1	0.002
	SS 316	Drilling	Drill	0.8	220-240 HB	30	44000	2	0.1	0.002
	SS 316	Drilling	Drill	0.8	220-240 HB	40	55000	2	0.1	0.002
	SS 316	Drilling	Drill	1	220-240 HB	20	33000	1	0.1	0.002
	SS 316	Drilling	Drill	1	220-240 HB	30	44000	1	0.1	0.002
	SS 316	Drilling	Drill	1	220-240 HB	40	55000	1	0.1	0.002
	SS 316	Drilling	Drill	1.5	220-240 HB	20	33000	2	0.1	0.003
	SS 316	Drilling	Drill	1.5	220-240 HB	30	44000	2	0.1	0.003
	SS 316	Drilling	Drill	1.5	220-240 HB	40	55000	2	0.1	0.003
	SS 316	Drilling	Drill	2	220-240 HB	20	33000	1	0.1	0.004
	SS 316	Drilling	Drill	2	220-240 HB	30	44000	1	0.1	0.004
	SS 316	Drilling	Drill	2	220-240 HB	40	55000	1	0.1	0.004
	SS 316	Drilling	Drill	2.5	220-240 HB	20	33000	2	0.1	0.004
	SS 316	Drilling	Drill	2.5	220-240 HB	30	44000	2	0.1	0.004
	SS 316	Drilling	Drill	2.5	220-240 HB	40	55000	2	0.1	0.004
	SS 316	Drilling	Drill	3	220-240 HB	20	33000	1	0.1	0.004
	SS 316	Drilling	Drill	3	220-240 HB	30	44000	1	0.1	0.004
	SS 316	Drilling	Drill	3	220-240 HB	40	55000	1	0.1	0.004
	SS 316	Drilling	Drill	3.5	220-240 HB	20	33000	2	0.1	0.005
	SS 316	Drilling	Drill	3.5	220-240 HB	30	44000	2	0.1	0.005
	SS 316	Drilling	Drill	3.5	220-240 HB	40	55000	2	0.1	0.0054
	SS 316	Profile Milling	Ball Nose	0.5	220-240 HB	20	33000	0.1	0.1	0.006
	SS 316	Profile Milling	Ball Nose	0.5	220-240 HB	30	44000	0.1	0.1	0.006
	SS 316	Profile Milling	Ball Nose	0.5	220-240 HB	40	55000	0.1	0.1	0.006
	SS 316	Profile Milling	Ball Nose	1	220-240 HB	20	33000	0.1	0.1	0.006
	SS 316	Profile Milling	Ball Nose	1	220-240 HB	30	44000	0.1	0.1	0.006
	SS 316	Profile Milling	Ball Nose	1	220-240 HB	40	55000	0.1	0.1	0.006
	SS 316	Profile Milling	Ball Nose	1.5	220-240 HB	20	33000	0.1	0.1	0.006
	SS 316	Profile Milling	Ball Nose	1.5	220-240 HB	30	44000	0.1	0.1	0.006
	SS 316	Profile Milling	Ball Nose	1.5	220-240 HB	40	55000	0.1	0.1	0.006
	SS 316	Profile Milling	Ball Nose	2	220-240 HB	20	33000	0.1	0.1	0.006
	SS 316	Profile Milling	Ball Nose	2	220-240 HB	30	44000	0.1	0.1	0.006
	SS 316	Profile Milling	Ball Nose	2	220-240 HB	40	55000	0.1	0.1	0.006
	SS 316	Profile Milling	Ball Nose	2.5	220-240 HB	20	33000	0.1	0.1	0.006
	SS 316	Profile Milling	Ball Nose	2.5	220-240 HB	30	44000	0.1	0.1	0.006
	SS 316	Profile Milling	Ball Nose	2.5	220-240 HB	40	55000	0.1	0.1	0.006
	SS 316	Profile Milling	Ball Nose	3	220-240 HB	20	33000	0.1	0.1	0.006
	SS 316	Profile Milling	Ball Nose	3	220-240 HB	30	44000	0.1	0.1	0.006
	SS 316	Profile Milling	Ball Nose	3	220-240 HB	40	55000	0.1	0.1	0.006
	SS 316	Profile Milling	Ball Nose	4	220-240 HB	20	33000	0.1	0.1	0.006
	SS 316	Profile Milling	Ball Nose	4	220-240 HB	30	44000	0.1	0.1	0.006
	SS 316	Profile Milling	Ball Nose	4	220-240 HB	40	55000	0.1	0.1	0.006
	SS 316	Profile Milling	Ball Nose	5	220-240 HB	20	33000	0.1	0.1	0.006
	SS 316	Profile Milling	Ball Nose	5	220-240 HB	30	44000	0.1	0.1	0.006
	SS 316	Profile Milling	Ball Nose	5	220-240 HB	40	55000	0.1	0.1	0.006
	SS 316	Profile Milling	Ball Nose	6	220-240 HB	20	33000	0.1	0.1	0.006
	SS 316	Profile Milling	Ball Nose	6	220-240 HB	30	44000	0.1	0.1	0.006
	SS 316	Profile Milling	Ball Nose	6	220-240 HB	40	55000	0.1	0.1	0.006
	SS 316	Slot Milling	End-Mill	0.5	220-240 HB	20	33000	1	0.1	0.008
	SS 316	Slot Milling	End-Mill	0.5	220-240 HB	30	44000	1	0.1	0.008
	SS 316	Slot Milling	End-Mill	0.5	220-240 HB	40	55000	1	0.15	0.009
	SS 316	Slot Milling	End-Mill	0.8	220-240 HB	20	33000	2	0.12	0.01
	SS 316	Slot Milling	End-Mill	0.8	220-240 HB	30	44000	2	0.14	0.01
	SS 316	Slot Milling	End-Mill	0.8	220-240 HB	40	55000	2	0.14	0.01
	SS 316	Slot Milling	End-Mill	1	220-240 HB	20	33000	3	0.12	0.01
	SS 316	Slot Milling	End-Mill	1	220-240 HB	30	44000	3	0.12	0.01
	SS 316	Slot Milling	End-Mill	1	220-240 HB	40	55000	3	0.15	0.01
	SS 316	Slot Milling	End-Mill	1.5	220-240 HB	20	33000	0.5	0.5	0.012
	SS 316	Slot Milling	End-Mill	1.5	220-240 HB	30	44000	0.5	0.5	0.017
	SS 316	Slot Milling	End-Mill	1.5	220-240 HB	40	55000	0.5	0.5	0.018
	SS 316	Slot Milling	End-Mill	2	220-240 HB	20	33000	4	0.08	0.009
	SS 316	Slot Milling	End-Mill	2	220-240 HB	30	44000	4	0.08	0.009
	SS 316	Slot Milling	End-Mill	2	220-240 HB	40	55000	4	0.09	0.009
	SS 316	Slot Milling	End-Mill	2.5	220-240 HB	20	33000	1	0.1	0.015
	SS 316	Slot Milling	End-Mill	2.5	220-240 HB	30	44000	1	0.1	0.015
	SS 316	Slot Milling	End-Mill	2.5	220-240 HB	40	55000	1	0.15	0.016
	SS 316	Slot Milling	End-Mill	3	220-240 HB	20	33000	2	0.12	0.01
	SS 316	Slot Milling	End-Mill	3	220-240 HB	30	44000	2	0.14	0.01
	SS 316	Slot Milling	End-Mill	3	220-240 HB	40	55000	2	0.14	0.01
	SS 316	Slot Milling	End-Mill	4	220-240 HB	20	33000	3	0.12	0.01
	SS 316	Slot Milling	End-Mill	4	220-240 HB	30	44000	3	0.12	0.01
	SS 316	Slot Milling	End-Mill	4	220-240 HB	40	55000	3	0.15	0.01
	SS 316	Slot Milling	End-Mill	4.5	220-240 HB	20	33000	3	0.12	0.01
	SS 316	Slot Milling	End-Mill	4.5	220-240 HB	30	44000	3	0.12	0.01
	SS 316	Slot Milling	End-Mill	4.5	220-240 HB	40	55000	3	0.15	0.01
	SS 316	Slot Milling	End-Mill	5	220-240 HB	20	33000	0.5	0.5	0.015
	SS 316	Slot Milling	End-Mill	5	220-240 HB	30	44000	0.5	0.5	0.017
	SS 316	Slot Milling	End-Mill	5	220-240 HB	40	55000	0.5	0.5	0.018
	SS 316	Slot Milling	End-Mill	6	220-240 HB	20	33000	4	0.08	0.009
	SS 316	Slot Milling	End-Mill	6	220-240 HB	30	44000	4	0.08	0.009
	SS 316	Slot Milling	End-Mill	6	220-240 HB	40	55000	4	0.09	0.009
	SS 316	Shoulder Mill	End-Mill	1	220-240 HB	20	33000	0.5	0.5	0.014
	SS 316	Shoulder Mill	End-Mill	1	220-240 HB	30	44000	0.5	0.5	0.017
	SS 316	Shoulder Mill	End-Mill	1	220-240 HB	40	55000	0.5	0.5	0.018
	SS 316	Shoulder Mill	End-Mill	2	220-240 HB	20	33000	4	0.08	0.009
	SS 316	Shoulder Mill	End-Mill	2	220-240 HB	30	44000	4	0.08	0.009
	SS 316	Shoulder Mill	End-Mill	2	220-240 HB	40	55000	4	0.09	0.009
	SS 316	Shoulder Mill	End-Mill	3	220-240 HB	20	33000	0.5	0.5	0.01
	SS 316	Shoulder Mill	End-Mill	3	220-240 HB	30	44000	0.5	0.5	0.017
	SS 316	Shoulder Mill	End-Mill	3	220-240 HB	40	55000	0.5	0.5	0.018
	SS 316	Shoulder Mill	End-Mill	4	220-240 HB	20	33000	4	0.08	0.009
	SS 316	Shoulder Mill	End-Mill	4	220-240 HB	30	44000	4	0.08	0.009
	SS 316	Shoulder Mill	End-Mill	4	220-240 HB	40	55000	4	0.09	0.009
	SS 316	Shoulder Mill	End-Mill	5	220-240 HB	20	33000	4	0.08	0.009
	SS 316	Shoulder Mill	End-Mill	5	220-240 HB	30	44000	4	0.08	0.009
	SS 316	Shoulder Mill	End-Mill	5	220-240 HB	40	55000	4	0.09	0.009
	SS 316	Shoulder Mill	End-Mill	6	220-240 HB	20	33000	0.5	0.5	0.013
	SS 316	Shoulder Mill	End-Mill	6	220-240 HB	30	44000	0.5	0.5	0.017
	SS 316	Shoulder Mill	End-Mill	6	220-240 HB	40	55000	0.5	0.5	0.018

MICRO90 Tool installation

1 Insert the collet into the shaft

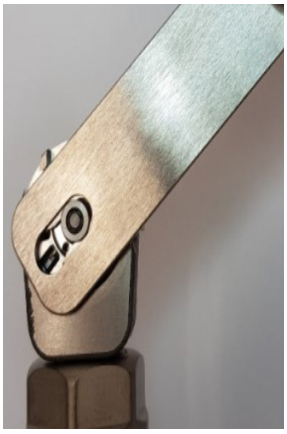

2 Lock the shaft using the dedicated key as shown in the picture, and screw the collet in position

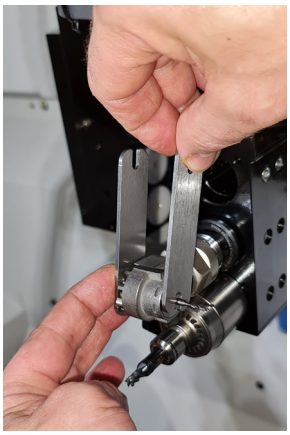

3 Insert the cutting tool into the collet then tighten the collet using both keys as shown in the picture

4 Use a dial indicator to align the spindle housing on the ground edge

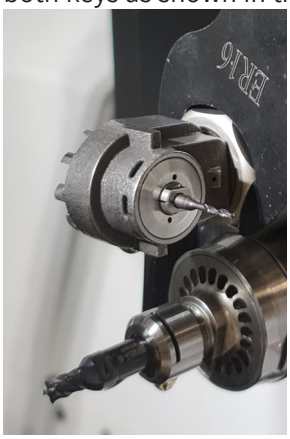

5 Use ER16 wrench to fasten the ER16 nut on the holder

MICRO90 Operating Data

	Material	Process	Type	Cutting Tool dia.	Hardness	Pressure	Speed (n)	Ae (mm)	Ap (mm)	Fz (mm)
N	Al-Si 9%	Drilling	Drill	0.50	110 HB	20	35,000	0.50	0.10	0.01
				0.50		30	44,000	0.50	0.10	0.01
				0.50		40	53,000	0.50	0.10	0.01
				1.00		20	35,000	1.00	0.20	0.01
				1.00		30	44,000	1.00	0.20	0.01
				1.00		40	53,000	1.00	0.20	0.01
				2.00		20	35,000	2.00	0.30	0.015
				2.00		30	44,000	2.00	0.30	0.017
				2.00		40	53,000	2.00	0.30	0.018
		Profile Milling	Ball Nose	1.00		20	35,000	0.06	0.05	0.003
				1.00		30	44,000	0.06	0.05	0.003
				1.00		40	53,000	0.07	0.13	0.003
				2.00		20	35,000	0.07	0.08	0.004
				2.00		30	44,000	0.07	0.08	0.004
				2.00		40	53,000	0.08	0.15	0.004
				3.00		20	35,000	0.08	0.08	0.006
				3.00		30	44,000	0.09	0.09	0.006
				3.00		40	53,000	0.10	0.15	0.006
		Slot Milling	Endmill	0.50		20	35,000	0.50	0.10	0.02
				0.50		30	44,000	0.50	0.12	0.02
				0.50		40	53,000	0.50	0.15	0.02
				1.00		20	35,000	1.00	0.10	0.025
				1.00		30	44,000	1.00	0.15	0.025
				1.00		40	53,000	1.00	0.15	0.025
				2.00		20	35,000	2.00	0.20	0.025
				2.00		30	44,000	2.00	0.20	0.025
				2.00		40	53,000	2.00	0.20	0.025
		Shoulder Mill		2.00		20	35,000	0.50	0.25	0.02
				2.00		30	44,000	0.50	0.50	0.02
				2.00		40	53,000	0.50	0.50	0.025
				2.00		20	35,000	0.20	0.10	0.015
				2.00		30	44,000	0.20	0.10	0.015
				2.00		40	53,000	0.20	0.10	0.015
H	H13	Profile Milling	Ball Nose	1.00	58 HRC	20	35,000	0.05	0.05	0.005
				1.00		30	44,000	0.05	0.05	0.005
				1.00		40	53,000	0.05	0.05	0.005
				2.00		20	35,000	0.07	0.07	0.006
				2.00		30	44,000	0.08	0.08	0.006
				2.00		40	53,000	0.08	0.08	0.006
				3.00		20	35,000	0.08	0.08	0.006
				3.00		30	44,000	0.09	0.10	0.006
				3.00		40	53,000	0.10	0.10	0.006
	SAE 1.2316	Drilling	Drill	0.50	35 HRC	20	35,000	0.50	0.05	0.01
				0.50		30	44,000	0.50	0.05	0.01
				0.50		40	53,000	0.50	0.05	0.01
				1.00		20	35,000	1.00	0.10	0.01
				1.00		30	44,000	1.00	0.10	0.01
				1.00		40	53,000	1.00	0.10	0.01
				2.00		20	35,000	2.00	0.10	0.01
				2.00		30	44,000	2.00	0.10	0.01
				2.00		40	53,000	2.00	0.10	0.01
		Profile Milling	Ball Nose	1.00		20	35,000	0.05	0.05	0.003
				1.00		30	44,000	0.05	0.05	0.003
				1.00		40	53,000	0.05	0.05	0.003
				2.00		20	35,000	0.08	0.08	0.004
				2.00		30	44,000	0.08	0.08	0.004
				2.00		40	53,000	0.08	0.08	0.004
				3.00		20	35,000	0.10	0.10	0.006
				3.00		30	44,000	0.10	0.10	0.006
				3.00		40	53,000	0.10	0.10	0.006
		Slot Milling	End-Mill	0.50		20	35,000	0.50	0.05	0.006
				0.50		30	44,000	0.50	0.05	0.006
				0.50		40	53,000	0.50	0.05	0.006
				1.00		20	35,000	1.00	0.10	0.006
				1.00		30	44,000	1.00	0.10	0.006
				1.00		40	53,000	1.00	0.15	0.006
				2.00		20	35,000	2.00	0.12	0.010
				2.00		30	44,000	2.00	0.14	0.010
				2.00		40	53,000	2.00	0.14	0.010
				3.00		20	35,000	3.00	0.12	0.010
				3.00		30	44,000	3.00	0.12	0.010
				3.00		40	53,000	3.00	0.15	0.010
		Shoulder Mill		2.00		20	35,000	0.50	0.50	0.001
				2.00		30	44,000	0.50	0.50	0.017
				2.00		40	53,000	0.50	0.50	0.018
				2.00		20	35,000	4.00	0.08	0.009
				2.00		30	44,000	4.00	0.08	0.009
				2.00		40	53,000	4.00	0.09	0.009
M	SS 316	Slot Milling	End-Mill	1.00	220 HB	20	35,000	1.00	0.10	0.015
				1.00		30	44,000	1.00	0.15	0.015
				1.00		40	53,000	1.00	0.15	0.015
				2.00		20	35,000	2.00	0.15	0.015
				2.00		30	44,000	2.00	0.15	0.015
				2.00		40	53,000	2.00	0.20	0.015
		Drilling	Drill	0.50		20	35,000	0.50	0.05	0.015
				0.50		30	44,000	0.50	0.05	0.015
				0.50		40	53,000	0.50	0.05	0.015
				1.00		20	35,000	1.00	0.10	0.015
				1.00		30	44,000	1.00	0.10	0.015
				1.00		40	53,000	1.00	0.10	0.015
				2.00		20	35,000	2.00	0.05	0.015
				2.00		30	44,000	2.00	0.05	0.015
				2.00		40	53,000	2.00	0.05	0.015
		Shoulder Mill	End-Mill	2.00		20	35,000	0.35	0.15	0.02
				2.00		30	44,000	0.40	0.15	0.02
				2.00		40	53,000	0.50	0.18	0.025
				2.00		20	35,000	4.00	0.07	0.015
				2.00		30	44,000	4.00	0.07	0.015
				2.00		40	53,000	4.00	0.08	0.015

PARTNERS

COLIBRI
SPINDLES

Colibri Spindles ltd.
Lavon Industrial Park, 2011800, Israel
Tel +972 4 9089104
Fax +972 4 9589061
marketing@colibrispindles.com
www.colibrispindles.com