HSM Jet Spindle Test Reports

PRODUCT PERFORMANCE COMPARISON

The HSM Jet Spindle performance documented in the following test reports shows a dramatic reduction in machining time compared to the standard machine spindle. Additional benefits include longer tool life, higher productivity and impressive cost reductions facilitated by the Jet Spindle's unique coolant powered technology and RPM monitoring system.

Pre-testing takes rigidity into account; checking that vibration and runout are kept to a minimum (2 µ). Our test report data has been collected under live operating conditions for a wide range of machining applications that serve a number of important industries: Die & Mold, Medical, Energy, Automotive, Aerospace & more.

TEST 1 OPERATIONS:

Shoulder Milling – roughing / finishing, Face Milling inclined surface, Helical Pocket Milling, Slot Milling – roughing, Helical Milling Hole – Ø4.2, inclined surface, Helical Milling Hole – Ø2.5, inclined surface, Thread Milling – M5x0.8, inclined surface, Slot Milling – finishing, Peck Drilling – Ø1.0mm, Trochoidal Slot Milling Ø1.0mm, Engraving.

Machine Center	
Brand / Model	LER
Max. RPM	10,000
Coolant Type	Emulsion
Coolant Pump Pressure [Bar]	40
Tool Adaptation	HSK A63
Work Piece	
Material	ASE 4340
Dimensions [mm]	58 x 58 x 35 mm
Spindle Models	
HPC JET + GreenJET (GJET)	

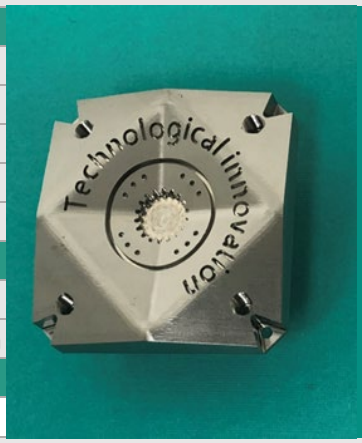

TOTAL MACHINING TIME

Machine Spindle:
4 hours 03 min

HSM Jet Spindles:
1 hour 40 min

TEST 2 OPERATIONS:

Contour Milling, Radius Milling, Slot Milling, Surface Milling – inclined surface 22°, Surface Milling – flat, Helical Milling – 4 holes, inclined surface, Chamfering – 4 holes, inclined surface Ø4.0mm, Chamfering – 4 holes, inclined surface , Helical Pre-Hole Milling – 54 holes, Peck Drilling – 54 holes, Helical Hole Milling – Ø3.3, inclined surface , Thread Milling M4x0.7 – 4 holes, inclined surface.

Machine Center	
Brand / Model	Hermle
Max. RPM	10,000
Coolant Type	Emulsion
Coolant Pump Pressure [Bar]	40
Tool Adaptation	HSK A63
Work Piece	
Material	SAE 6061
Dimensions [mm]	70 x 40 x 35 mm
Spindle Models	
HPC JET + GreenJET (GJET)	

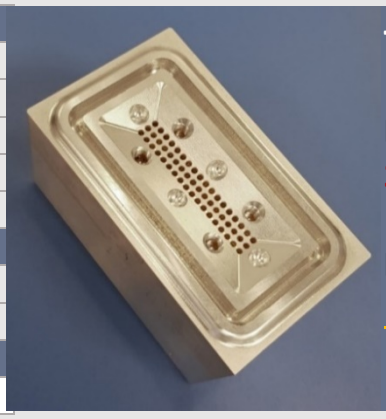

TOTAL MACHINING TIME

Machine Spindle:
32:30 min

HSM Jet Spindles:
13:40 min

HSM JET SPINDLE PERFORMANCE **TEST 1**

Machining Operations:

- Shoulder Milling – roughing
- Shoulder Milling – finishing
- Face Milling – inclined surfaces
- Helical Pocket Milling

SHOULDER MILLING	Machine Spindle	HPC Jet Spindle
Cutting Tool	EC-A2 030-040/12C6R.2H55	
Tool Diameter - D [mm]	3.00	
No. of Teeth - Z	2	
Depth of Cut - ap [mm]	2.12	
Cutting Width - ae [mm]	0.10 - 0.25	0.08 - 0.25
Spindle RPM - n (Idle)	6,000	32,000
Feed - F [mm/min]	205	800
Machining Time [min]	**21:00**	**8:57**

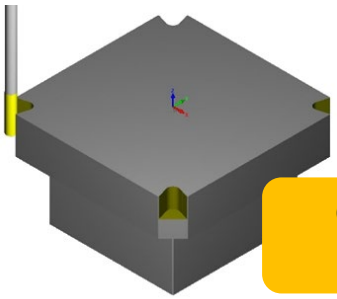

CUT CYCLE TIME
57%

SHOULDER MILLING	Machine Spindle	HPC Jet Spindle
Cutting Tool	EBA-B2 030-030/06C6-57	
Tool Diameter - D [mm]	2.00	
No. of Teeth - Z	2	
Depth of Cut - ap [mm]	0.20	0.20
Cutting Width - ae [mm]	0.15	015
Spindle RPM - n (Idle)	5,000	32,000
Feed - F [mm/min]	500	1,200
Machining Time [min]	**11:00**	**4:00**

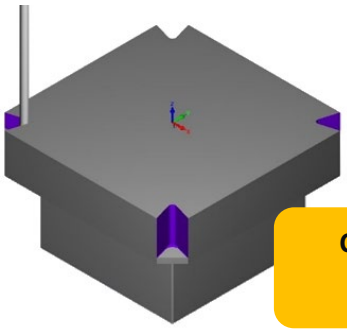

CUT CYCLE TIME
64%

FACE MILLING	Machine Spindle	HPC Jet Spindle
Cutting Tool	EB-A2 04-08C06M70	
Tool Diameter - D [mm]	4.00	
No. of Teeth - Z	2	
Depth of Cut - ap [mm]	0.5 - 6.0	6.0
Cutting Width - ae [mm]	0.10	0.07
Spindle RPM - n (Idle)	5,000	32,000
Feed - F [mm/min]	500	2,300
Machining Time [min]	**98:49**	**49:00**

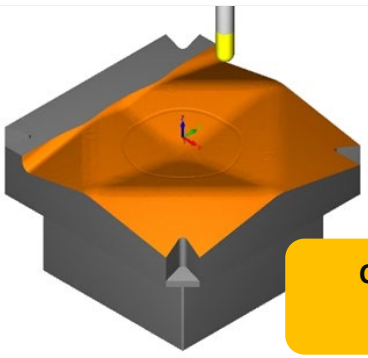

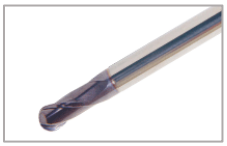

CUT CYCLE TIME
50%

POCKET MILLING	Machine Spindle	HPC Jet Spindle
Cutting Tool	EC-A2 030-040/12C6R.2H55	
Tool Diameter - D [mm]	3.00	
No. of Teeth - Z	2	
Depth of Cut - ap [mm]	0.20	0.15
Cutting Width - ae [mm]	1.50	1.50
Spindle RPM - n (Idle)	5,000	32,000
Feed - F [mm/min]	500	1,200
Machining Time [min]	**4:04**	**1:44**

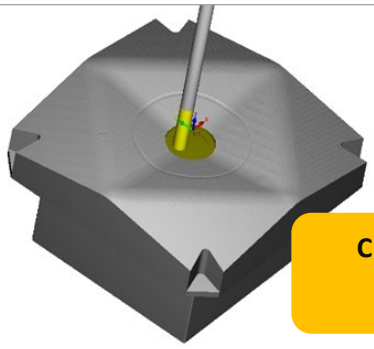

CUT CYCLE TIME
57%

HSM JET SPINDLE PERFORMANCE **TEST 1**

Machining Operations:

- Trochoidal Slot Milling – roughing
- Pre-thread Helical Hole Milling – Ø4.2, inclined surface
- Helical Hole Milling – Ø2.5, inclined surface
- Thread Milling – M5x0.8, inclined surface

TROCHOIDAL MILLING	Machine Spindle	HPC Jet Spindle
Cutting Tool	EC-A2 020-030/12C6R.3H55	
Tool Diameter - D [mm]	2.00	
No. of Teeth - Z	2	
Depth of Cut - ap [mm]	0.10 - 2.40	0.10 - 2.40
Cutting Width - ae [mm]	0.50	0.50
Spindle RPM - n (Idle)	5,000	32,000
Feed - F [mm/min]	500	1,000
Machining Time [min]	**2:22**	**1:44**

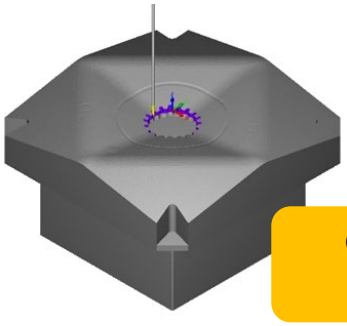

CUT CYCLE TIME
27%

HELICAL MILLING Ø4.2	Machine Spindle	HPC Jet Spindle
Cutting Tool	EC-A2 020-030/12C6R.3H55	
Tool Diameter - D [mm]	3.00	
No. of Teeth - Z	2	
Depth of Cut - ap [mm]	0.10	0.10
Cutting Width - ae [mm]	0.10	0.10
Spindle RPM - n (Idle)	5,000	32,000
Feed - F [mm/min]	350	1,000
Machining Time [min]	**12:10**	**1:44**

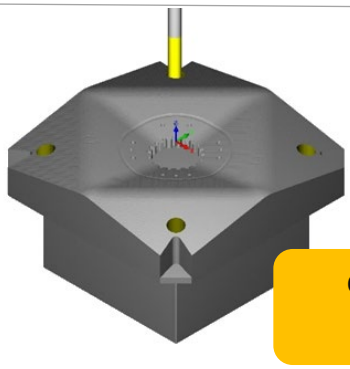

CUT CYCLE TIME
86%

HOLE MILLING Ø2.5	Machine Spindle	HPC Jet Spindle
Cutting Tool	EC-A2 020-030/12C6R.3H55	
Tool Diameter - D [mm]	2.00	
No. of Teeth - Z	2	
Depth of Cut - ap [mm]	0.10	0.10
Cutting Width - ae [mm]	0.10	0.10
Spindle RPM - n (Idle)	5,000	32,000
Feed - F [mm/min]	350	1,300
Machining Time [min]	**1:03**	**0:30**

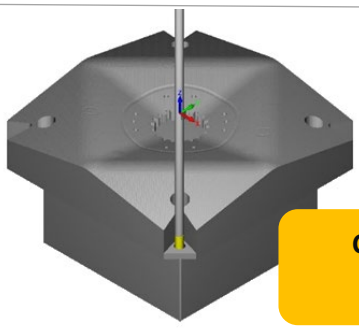

CUT CYCLE TIME
52%

THREAD MILLING M5	Machine Spindle	HPC Jet Spindle
Cutting Tool	MTECS 06038C12 0.8ISO	
Tool Diameter - D [mm]	4.05	3.00
No. of Teeth - Z	3	
Depth of Cut - ap [mm]	7.30	7.30
Cutting Width - ae [mm]	0.80	0.80
Spindle RPM - n (Idle)	3,500	32,000
Feed - F [mm/min]	150	700
Machining Time [min]	**1:05**	**0:20**

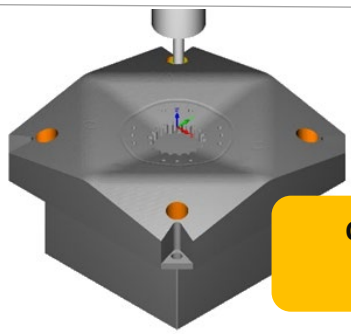

CUT CYCLE TIME
69%

HSM JET SPINDLE PERFORMANCE **TEST 1**

Machining Steps:

- Trochoidal Slot Milling – finishing
- Helical Hole Milling – Ø1.0mm
- Trochoidal Slot Milling – Ø1.0mm
- Engraving

TROCHOIDAL MILLING	Machine Spindle	GJET Spindle
Cutting Tool	EC-A2 006-009/3C4R05H45	
Tool Diameter - D [mm]	0.60	
No. of Teeth - Z	2	
Depth of Cut - ap [mm]	0.03	0.03
Cutting Width - ae [mm]	0.03	0.03
Spindle RPM - n (Idle)	5,000	52,000
Feed - F [mm/min]	500	1,000
Machining Time [min]	**12:47**	**8:00**

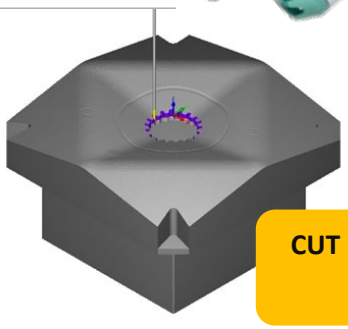

CUT MACHINING TIME
37%

HELICAL HOLE MILLING	Machine Spindle	GJET Spindle
Cutting Tool	EC-A2 010-015/04C4H45	
Tool Diameter - D [mm]	1.00	
No. of Teeth - Z	2	
Depth of Cut - ap [mm]	0.05	0.05
Cutting Width - ae [mm]	0.05	0.05
Spindle RPM - n (Idle)	5,000	52,000
Feed - F [mm/min]	75	4,000
Machining Time [min]	**2:38**	**1:31**

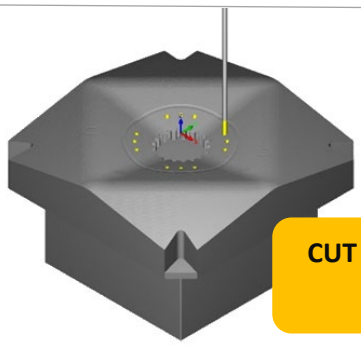

CUT MACHINING TIME
42%

TROCHOIDAL MILLING	Machine Spindle	GJET Spindle
Cutting Tool	EC-A2 010-015/04C4H45 702	
Tool Diameter - D [mm]	1.00	
No. of Teeth - Z	2	
Depth of Cut - ap [mm]	2.42	2.42
Cutting Width - ae [mm]	0.10	0.10
Spindle RPM - n (Idle)	5,000	52,000
Feed - F [mm/min]	350	1,300
Machining Time [min]	**6:10**	**1:42**

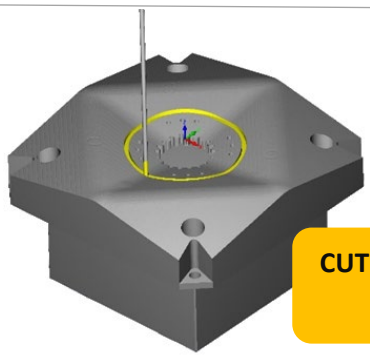

CUT MACHINING TIME
83%

ENGRAVING	Machine Spindle	GJET Spindle
Cutting Tool	EC-A2 006-009/2C4R.1H45	
Tool Diameter - D [mm]	0.60	
No. of Teeth - Z	2	
Depth of Cut - ap [mm]	1.50	1.50
Cutting Width - ae [mm]	0.05	0.05
Spindle RPM - n (Idle)	5,000	52,000
Feed - F [mm/min]	350	1,000
Machining Time [min]	**70:00**	**21:37**

CUT MACHINING TIME
69%

HSM JET SPINDLE PERFORMANCE **TEST 2**

Machining Operations:

- Contour Milling
- Radius Milling
- Slot Milling
- Surface Milling – inclined surface 22°

CONTOUR MILLING	Machine Spindle	HPC Jet Spindle
Cutting Tool	EBA-B2 030-030/06C6-57	
Tool Diameter - D [mm]	3.00	
No. of Teeth - Z	2	
Depth of Cut - ap [mm]	1.5	
Cutting Width - ae [mm]	0.50	0.15
Spindle RPM - n (Idle)	6,000	33,000
Feed - F [mm/min]	600	4,000
Machining Time [min]	**4:21**	**2:00**

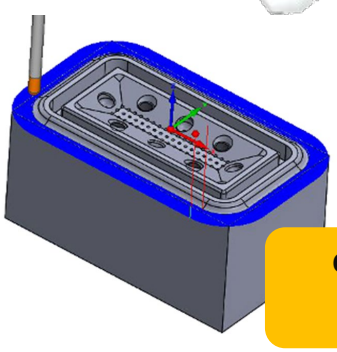

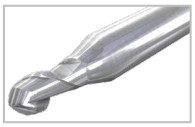

CUT CYCLE TIME
54%

RADIUS MILLING	Machine Spindle	HPC Jet Spindle
Cutting Tool	EBA-B2 030-030/06C6-57	
Tool Diameter - D [mm]	3.00	
No. of Teeth - Z	2	
Depth of Cut - ap [mm]	1.5	
Cutting Width - ae [mm]	0.08	0.05
Spindle RPM - n (Idle)	6,000	33,000
Feed - F [mm/min]	600	6,000
Machining Time [min]	**6:27**	**2:00**

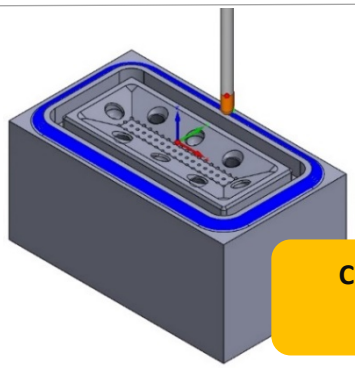

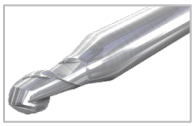

CUT CYCLE TIME
69%

SLOT MILLING	Machine Spindle	HPC Jet Spindle
Cutting Tool	EBA-B2 030-030/06C6-57	
Tool Diameter - D [mm]	3.00	
No. of Teeth - Z	2	
Depth of Cut - ap [mm]	5.0	
Cutting Width - ae [mm]	0.60	1.00
Spindle RPM - n (Idle)	6,000	33,000
Feed - F [mm/min]	600	2,500
Machining Time [min]	**1:43**	**1:00**

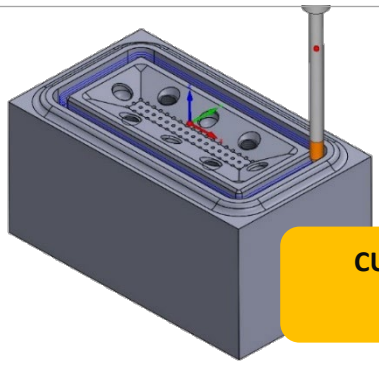

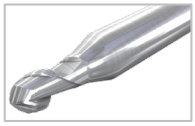

CUT CYCLE TIME
42%

SURFACE MILLING 22°	Machine Spindle	HPC Jet Spindle
Cutting Tool	EBA-B2 030-030/06C6-57	
Tool Diameter - D [mm]	3.00	
No. of Teeth - Z	2	
Depth of Cut - ap [mm]	3.00	
Cutting Width - ae [mm]	0.05	0.08
Spindle RPM - n (Idle)	6,000	33,000
Feed - F [mm/min]	700	4,000
Machining Time [min]	**6:33**	**2:20**

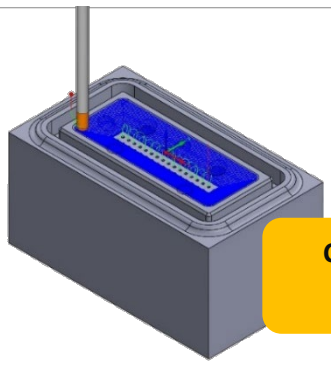

CUT CYCLE TIME
64%

HSM JET SPINDLE PERFORMANCE **TEST 2**

Machining Operations:

- Surface Milling – flat
- Helical Milling – 4 holes, inclined surface
- Chamfering – 4 holes, inclined surface Ø4.0mm
- Pre-Thread Helical Milling – Ø3.3, inclined surface

SURFACE MILLING	Machine Spindle	HPC Jet Spindle
Cutting Tool	EBA-B2 030-030/06C6-57	
Tool Diameter - D [mm]	3.00	
No. of Teeth - Z	2	
Depth of Cut - ap [mm]	0.60	
Cutting Width - ae [mm]	0.08	0.08
Spindle RPM - n (Idle)	6,000	33,000
Feed - F [mm/min]	700	5,500
Machining Time [min]	**4:50**	**1:20**

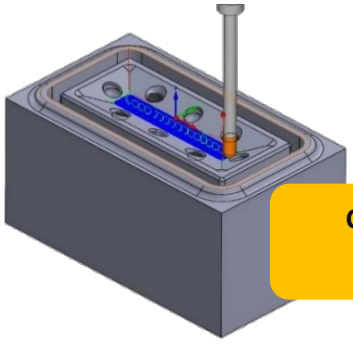

CUT CYCLE TIME
72%

HELICAL MILLING	Machine Spindle	HPC Jet Spindle
Cutting Tool	EBA-B2 030-030/06C6-57	
Tool Diameter - D [mm]	3.00	
No. of Teeth - Z	2	
Depth of Cut - ap [mm]	3.20	
Cutting Width - ae [mm]	0.25	0.35
Spindle RPM - n (Idle)	6,000	33,000
Feed - F [mm/min]	700	2,500
Machining Time [min]	**0:25**	**0:19**

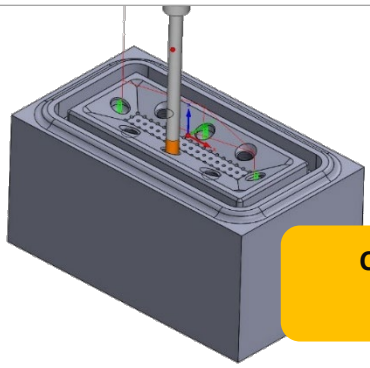

CUT CYCLE TIME
22%

CHAMFERING Ø4.0mm	Machine Spindle	HPC Jet Spindle
Cutting Tool	EBA-B2 030-030/06C6-57	
Tool Diameter - D [mm]	3.00	
No. of Teeth - Z	2	
Depth of Cut - ap [mm]	0.70	
Cutting Width - ae [mm]	0.08	0.08
Spindle RPM - n (Idle)	6,000	33,000
Feed - F [mm/min]	800	5,500
Machining Time [min]	**1:08**	**0:53**

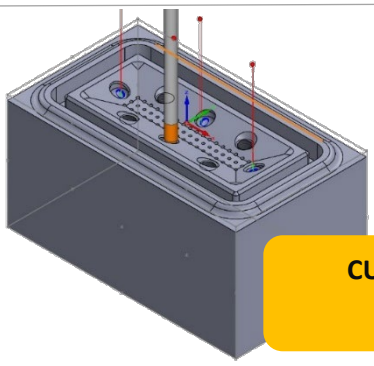

CUT CYCLE TIME
22%

HELICAL MILLING	Machine Spindle	HPC Jet Spindle
Cutting Tool	EC-B3 03-08C06E50	
Tool Diameter - D [mm]	3.00	
No. of Teeth - Z	3	
Depth of Cut - ap [mm]	0.50	
Cutting Width - ae [mm]	0.15	0.15
Spindle RPM - n (Idle)	5,500	32,000
Feed - F [mm/min]	700	1,800
Machining Time [min]	**0:15**	**0:11**

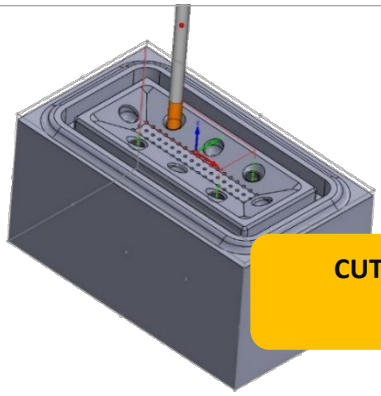

CUT CYCLE TIME
27%

HSM JET SPINDLE PERFORMANCE **TEST 2**

Machining Operations:

- Pre-Hole Drilling – 54 holes
- Peck Drilling – 54 holes
- Thread Milling M4x0.7 – 4 holes, inclined surface

PRE-HOLE DRILLING	Machine Spindle	GJET Spindle
Cutting Tool	BA-B2 014-021/08C4-M45	
Tool Diameter - D [mm]	1.40	
No. of Teeth - Z	2	
Depth of Cut - ap [mm]	1.00	
Cutting Width - ae [mm]	1.00	1.00
Spindle RPM - n (Idle)	5,500	47,000
Feed - F [mm/min]	200	400
Machining Time [min]	**0:37**	**0:25**

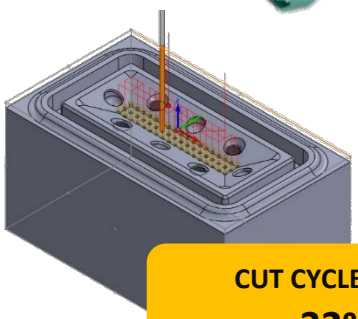

CUT CYCLE TIME
32%

PECK DRILLING	Machine Spindle	GJET Spindle
Cutting Tool	SCD-012- 004-030 AP4	
Tool Diameter - D [mm]	1.20	
No. of Teeth - Z	2	
Depth of Cut - ap [mm]	1.00	
Cutting Width - ae [mm]	1.00	1.00
Spindle RPM - n (Idle)	5,000	47,000
Feed - F [mm/min]	75	200
Machining Time [min]	**4:22**	**1:53**

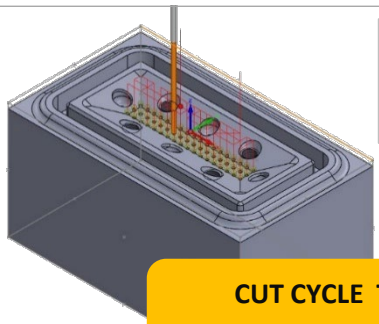

CUT CYCLE TIME
57%

THREAD MILLING	Machine Spindle	GJET Spindle
Cutting Tool	MTECSH 06031C12 0.7ISO	
Tool Diameter - D [mm]	3.00	
No. of Teeth - Z	2	
Depth of Cut - ap [mm]	3.00	3.00
Cutting Width - ae [mm]	0.70	0.70
Spindle RPM - n (Idle)	5,500	47,000
Feed - F [mm/min]	1,000	3,000
Machining Time [min]	**0.36**	**0:19**

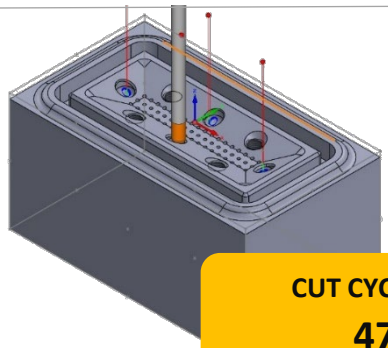

CUT CYCLE TIME
47%